1 Pnematic Drives

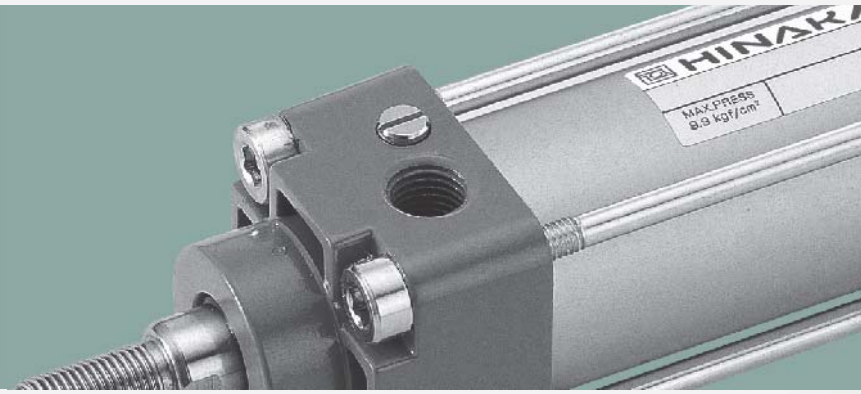

Standard Cylinder Series

◎Aluminum Alloy Pneumatic Cylinder / DAL

HINAKA

DAL Ordering Guidelines

Ordering Guidelines

D AL D - 63 M 50 LB - Y - G51R 2

1. **Model**
2. **Aluminum Alloy Series**
3. **Pneumatic Cylinder Type**

DAL Standard 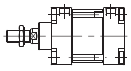	**DALM** Multi-Stroke 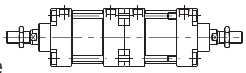
DALD Dual Rod 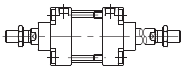	**DALT** Multi-Stage 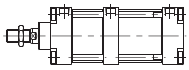
DALE Adjustable Dual Rod 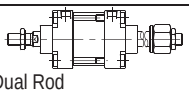	

4. **Pneumatic Cylinder Bore Size**
5. **Sensor Device**
   M : With Magnet / N : Without Magnet
6. **Stroke** (ST)
7. **Mounting Accessories**

FA FB 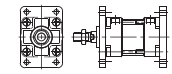	**TA TB** 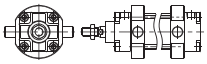
LA 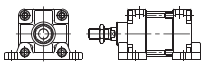	**TC** 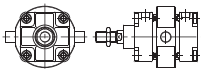
LB 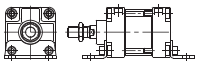	**CA CB** 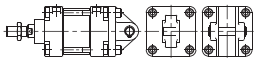

8. **Rod End Accessories**

I 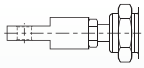	**P** 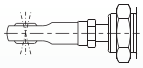
Y 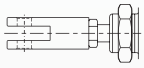	**T** 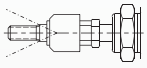

9. **Sensor Type**
   (Refer to Section 8 Accessories: Sensor Devices)
10. **Number of Sensors**

DAL Internal Structure

Internal Structure：

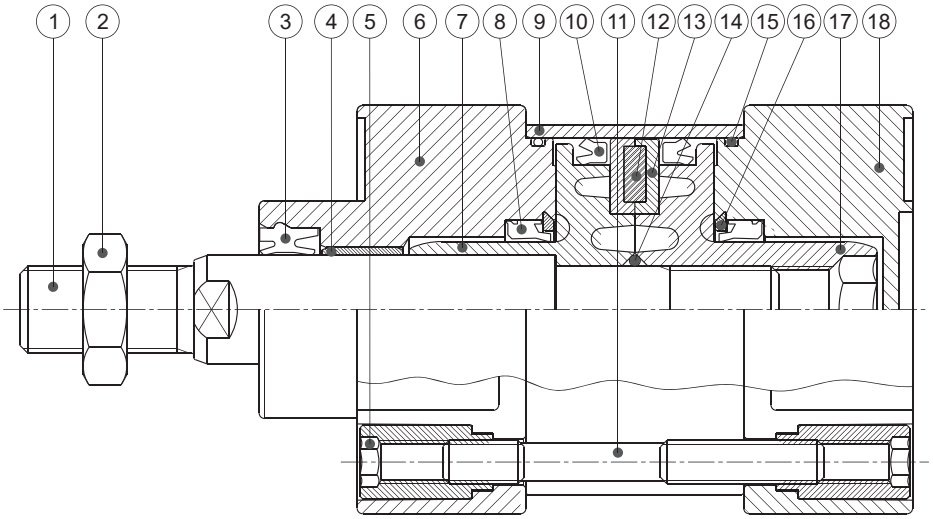

Components：

Item	Part Name	Material	Item	Part Name	Material
1	Piston Rod	S45C	10	U-Ring	NBR
2	Hex Nut	Iron	11	Rod	SS400
3	Rod Seal	NBR	12	Magnetic Ring	Rubber
4	Self-oiling Bearing	Sintered Copper	13	Back-up Ring	POM
5	Rod Cap	S10C	14	O-Ring	NBR
6	Front Cap	A6061	15	O-Ring	NBR
7	Front Piston Body	A6061	16	Cushion Ring Clasp	POM
8	Cushion Ring	NBR	17	Rear Piston Body	A6061
9	Cylinder Tube	A6063T6	18	Rear Cap	A6061

Applicable Conditions：

Bore Size	Function	Working Fluid	Temperature Range	Operating Speed Range	Operating Oil	Maximum Operating Pressure
40, 50, 63, 80 100, 125, 150	Double Acting	Filtered Compressed Air	-10°C~60°C	50~500mm/s	Not Necessary	1MPa (10kgf/cm²)

DAL

Feature Description：

- his series features two oil-resistant low friction U-ring seals.
- Adjustable end cushioning absorbs impact in high-speed operations without vibration, increasing operating efficiency.
- All models can be equipped with magnetic sensor devices.
- Self-lubricating front cap bearing enabling a low friction coefficient.
- Anticorrosive and light weight aluminum alloy cylinder.
- Easy mounting and fitting attachment.

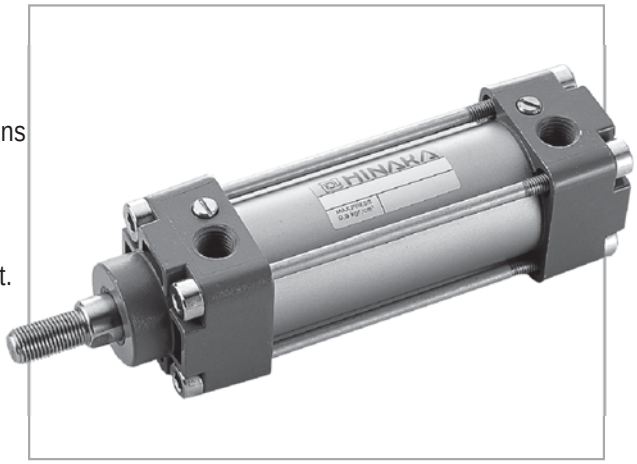

DAL (Standard Type)

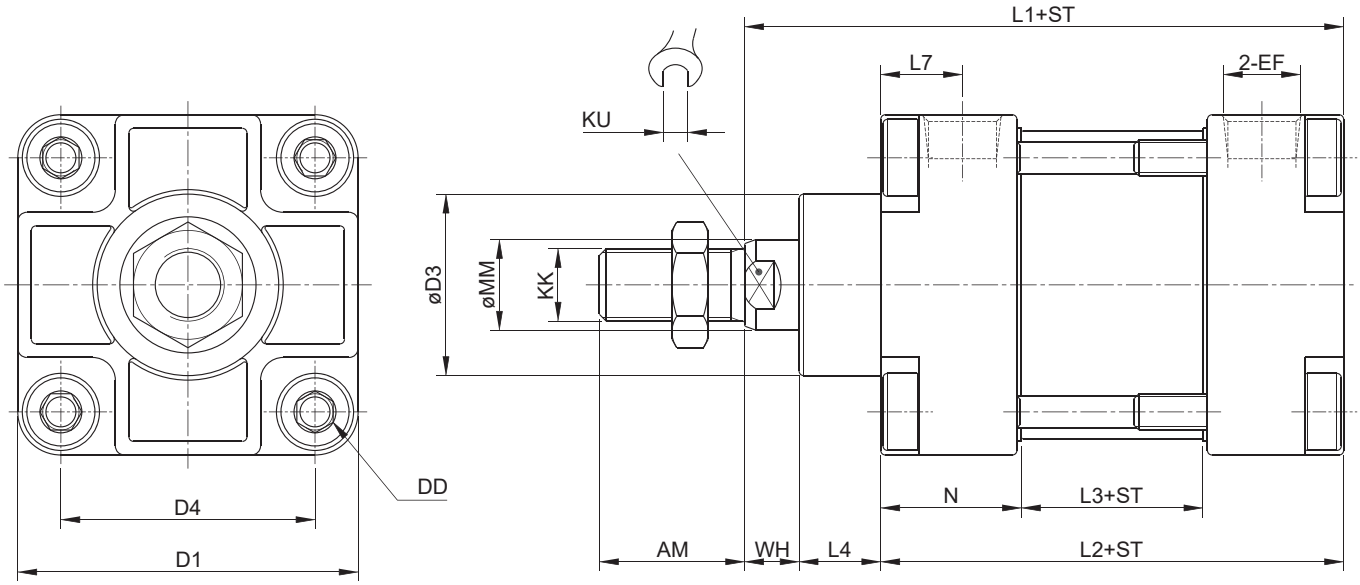

ST=Stroke Unit : mm

Label / Bore Size	AM	□D1	□D4	øD3	DD	L1	L2	L3	L4	L7	KK	KU	N	øMM	WH	EF
ø40	24	52	37	35	M6×1.0	122	98	36	14	19	M12×1.25	14	31	16	10	PT1/4
ø50	32	65	47	40	M6×1.0	129.5	100	38	17.5	19	M16×1.5	17	31	20	12	PT1/4
ø63	32	75	56	40	M8×1.25	132	102	40	18	18	M16×1.5	17	31	20	12	PT3/8
ø80	40	94	70	45	M10×1.5	153	120	50	20	22	M20×1.5	22	35	25	13	PT3/8
ø100	40	113	85	49	M10×1.5	157	124	54	20	22	M20×1.5	22	35	25	13	PT1/2
ø125	50	146	110	60	M14×1.5	181	134	52	32	26	M32×2	32	41	35	15	PT1/2
ø150	50	172	130	60	M14×1.5	192	144	54	33	28	M36×2	36	45	40	15	PT1/2

Feature Description :

- 〈ø40~ø100〉Pistons built into rod as one body preventing loosening, high concentricity, low friction, and roundness; preventing dead angles.
- The full range of this series can be equipped with magnetic rings and adjustable and end cushions.
- High accuracy adjustable forward stroke models.

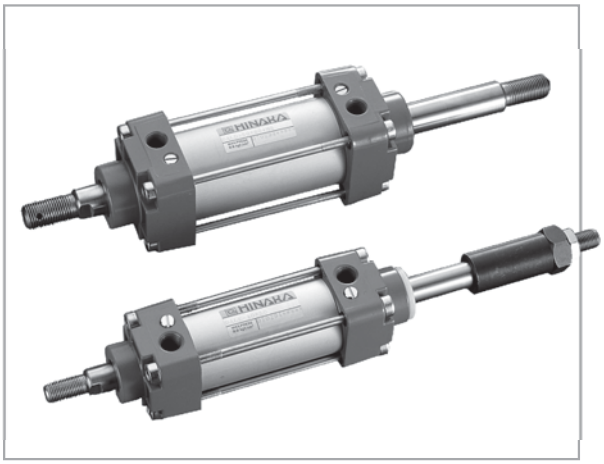

Model: DALD
Double Acting Dual Rod

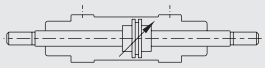

Model: DALE
Adjustable Double Acting Dual Rod

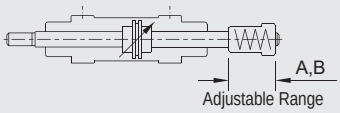

※ Adjustable models come with adjustable nuts and impact bumpers.
A: Adjustable Stroke Range 0~25m/m B:Adjustable Stroke Range 0~50 m/m

DALD (Dual Rod Type)

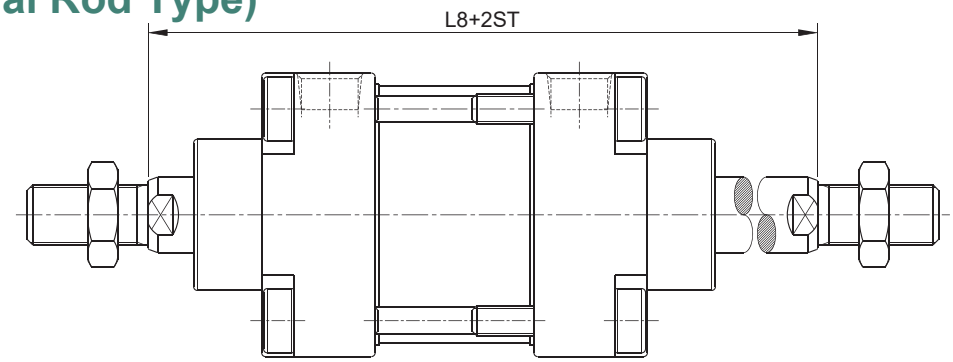

DALE (Adjustable Dual Rod Type)

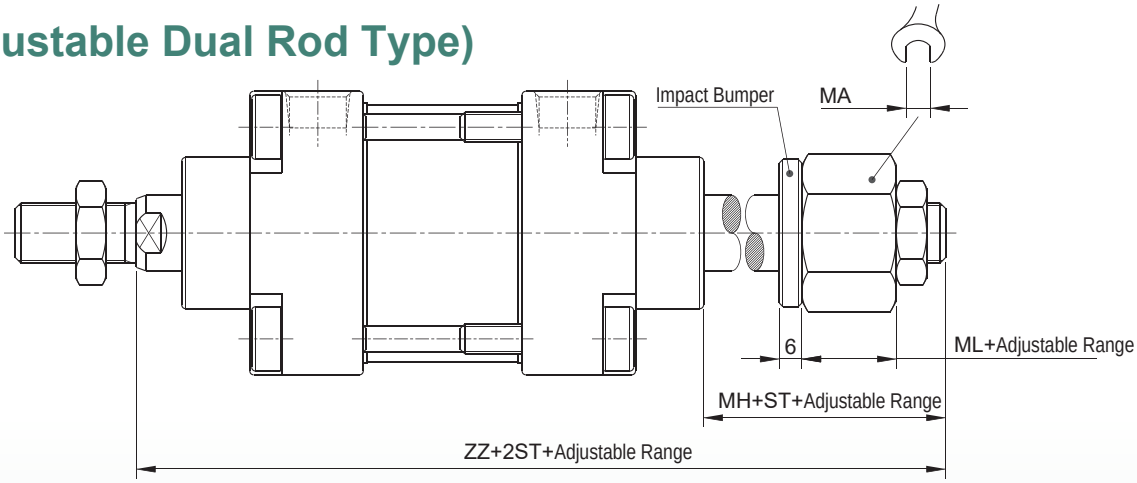

ST=Stroke Unit : mm

Label / Bore Size	L8	ZZ	MH	ML	MA	Adjustable Range
ø40	146	194	34	20	27	25/50
ø50	159	223	44	25	36	
ø63	162	226	44	25	36	
ø80	186	266	53	28	41	
ø100	190	270	53	28	41	
ø125	228	328	65	32	46	
ø150	240	340	65	36	50	

※ Refer to Standard Type for other dimensions.

DALM

Feature Description：

- Multi Position Pneumatic Cylinder has pistons and piston rods.
- Can be applied in positioning, feeding, quantitative filling, lef and right shifting, and flow control.
- Both ends have adjustable magnetic rings and cushioning.

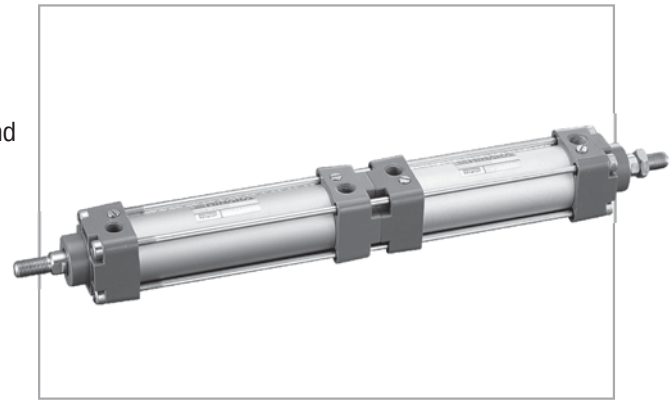

Function Description：

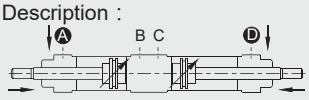

(I) Air intake at A and D for shortest stroke.

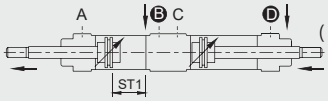

(II) Air intake at B and D for first stroke.

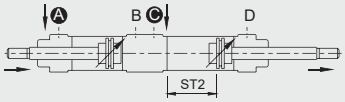

(III) Air intake at A and C for second stroke.

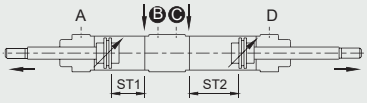

(IV) Air intake at B and C for longest stroke.

Please specify first or second stroke when ordering.

DALM (Multi-Position Cylinder)

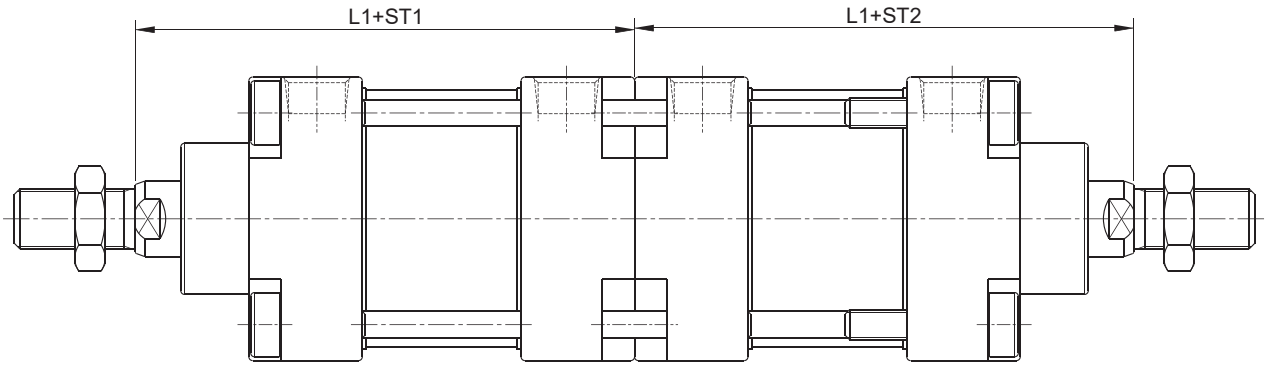

ST=Stroke
Unit : mm

Label / Bore Size	L1
ø40	122
ø50	129.5
ø63	132
ø80	153
ø100	157
ø125	181
ø150	192

※ Refer to Standard Type for other dimensions.

Feature Description：

- Tandem Double Force Cylinder has dual pistons and piston rods.
- Three stroke positions can be applied in designs for positioning, feeding, left and right shifting, quantitative filling, and flow control.
- Double output force feature compensates for insufficient output in design.
- Able to equip with magnetic rings and adjustable end stoppers.

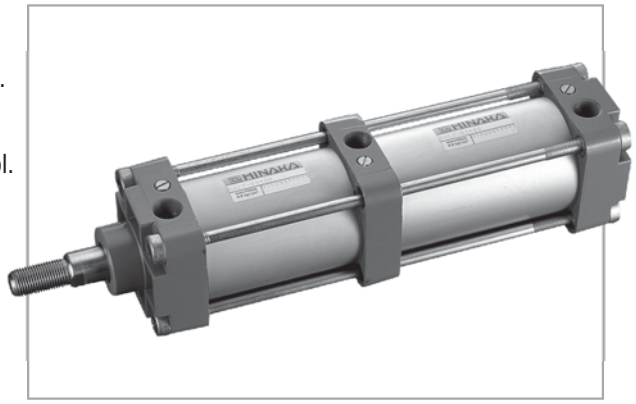

Feature Description：

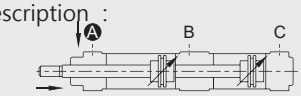

(I) Air pressure to port A for shortest stroke.

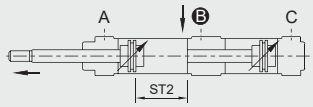

(III) Air pressure to port B for second stroke.

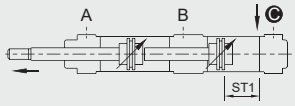

(II) Air pressure to port C for first stroke.

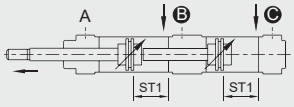

(IV) Air pressure to ports BC, at first stroke inner axis output doubles force stroke.

When ordering please specify first or second stroke.
Length of first stroke can not exceed length of second stroke.

DALT (Tandem Double Force)

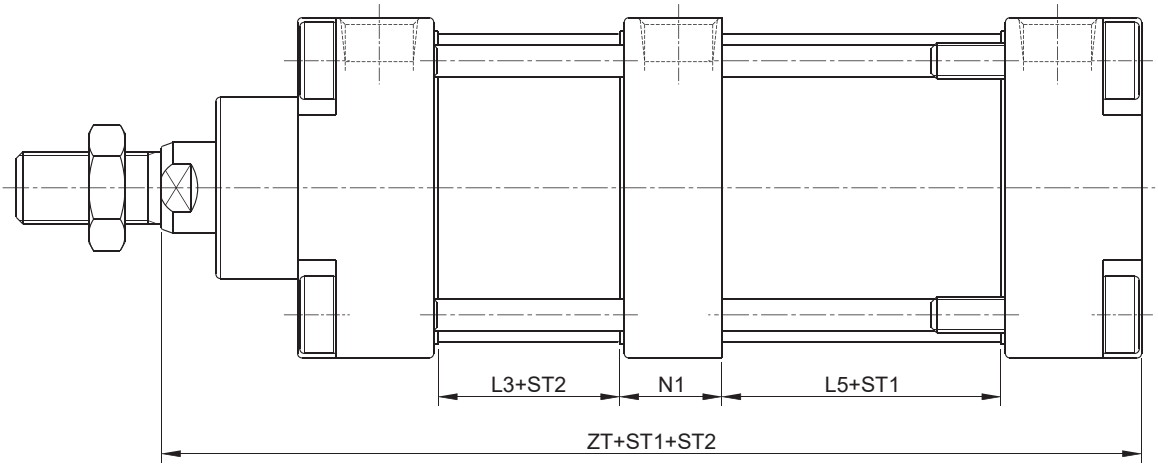

ST=Stroke
Unit : mm

Label / Bore Size	L5	N1	ZT
ø40	52	24	198
ø50	58	24	211
ø63	61.5	22.5	216
ø80	71	26	250
ø100	75	26	258
ø125	80	41	262
ø150	42	45	279

※ Refer to Standard Type for other dimensions.

DAL Mounting Accessories

FA-FB Type Flange Mount

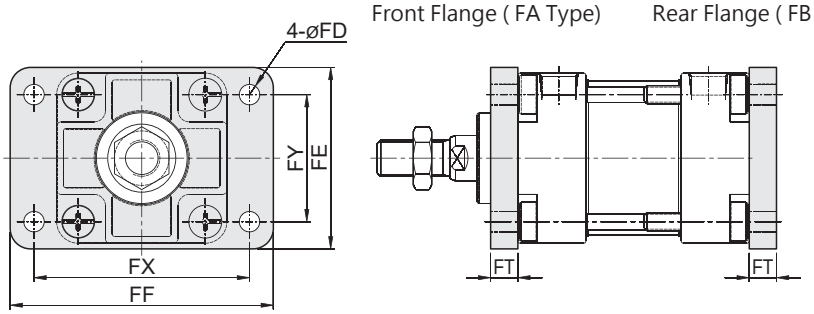

Unit : mm

Label / Bore Size	FT	FX	FY	FE	FF	øFD
ø40	12	70	37	56	86	9
ø50	12	85	47	65	104	9
ø63	12	95	56	80	116	9
ø80	16	120	70	96	145	12
ø100	16	140	85	120	170	14
ø125	20	176	110	142	206	16
ø150	24	210	130	170	245	16

LA Type Foot Bracket

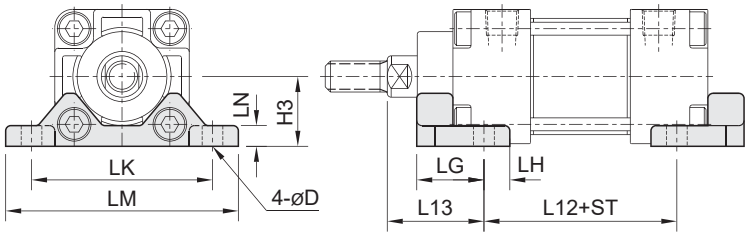

Unit : mm

Label / Bore Size	LK	LM	LN	H3	LG	LH	L12	L13	øD
ø40	70	91	9	27	26	10	76	35	8
ø50	83	105	9	33	26	9	77	41	8
ø63	95	116	10	39	26	13	82	40	8
ø80	121	146	13	48	33	20	90	48	10
ø100	140	170	17.8	58	32	26	102	44	10

LB Type Foot Bracket

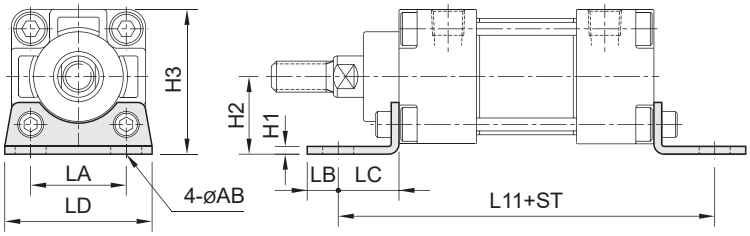

Unit : mm

Label / Bore Size	L11	LB	LC	H1	H2	H3	LA	LD	øAB
ø40	145	16	23.5	3	30	56	37	57	9
ø50	156	12	28	3	36.5	69	47	68	12
ø63	164	13	31	3	41	78.5	56	80	12
ø80	180	16	30	4	49	96	70	97	14
ø100	184	16	30	4	57	113.5	85	112	14
ø125	194	20	30	5	77	150	110	140	15.2
ø150	214	15	35	5	92	178	130	170	15

TA, TB, TC Type Trunnion Mount

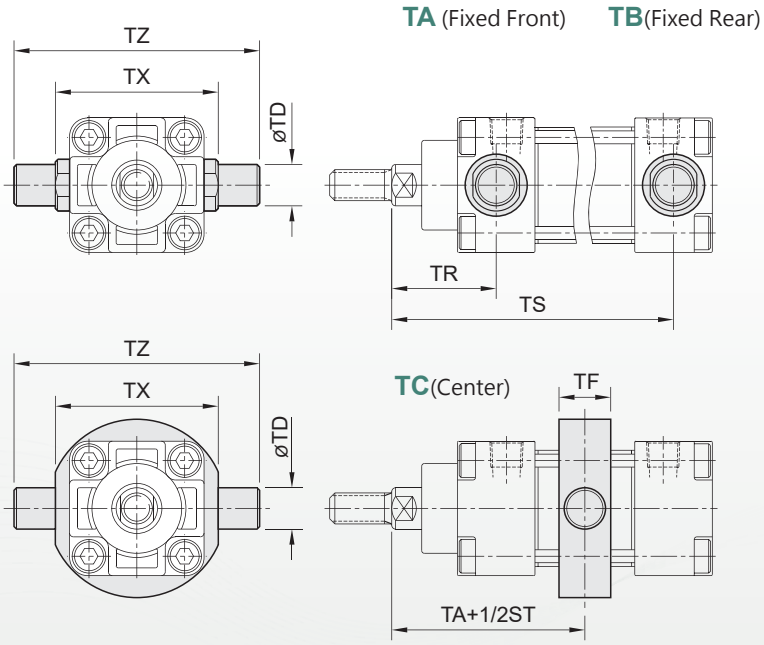

Unit : mm

Label / Bore Size	TX	TZ	TR	TS	TD	TF	øTA
ø40	63	95	—	—	16	20	73
ø50	75	107	—	—	16	25	79.5
ø63	90	130	—	—	20	25	81
ø80	110	150	55	131	20	35	93
ø100	132	182	55	135	25	40	95
ø125	170	240	—	—	35	48	114
ø150	202	292	—	—	45	60	120

※ DALø80 and ø100 come with TA and TB designs.
Other sizes come with the TC design; which is between the front cover (TA) and back cover (TB).

CA, CB Type Clevis Bracket

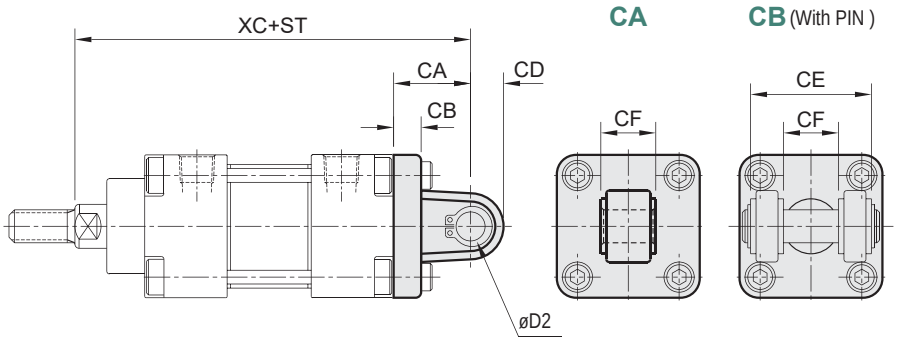

Unit : mm

Label / Bore Size	XC	CA	CB	CD	CE	CF	øD2
ø40	150	28	10	12	44	20	12
ø50	157.5	28	10	14	52	20	12
ø63	164	32	10	17	52	20	16
ø80	193	40	14	17	64	32	16
ø100	201	44	14	21	64	32	20
ø125	231	※	16	30	70	35	25
ø150	247	55	20	30	70	40	25

※CA : CA-50 / CB-60

Mounting Diagrams

FA Front Flange

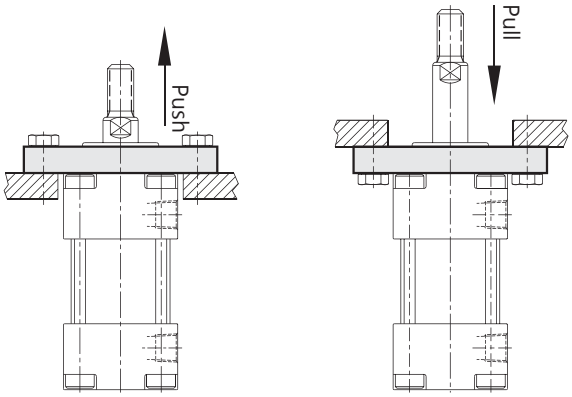

FB Rear Flange

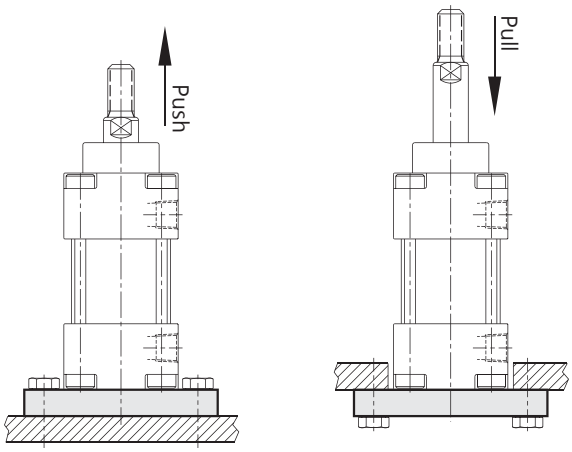

LA LB Foot Bracket

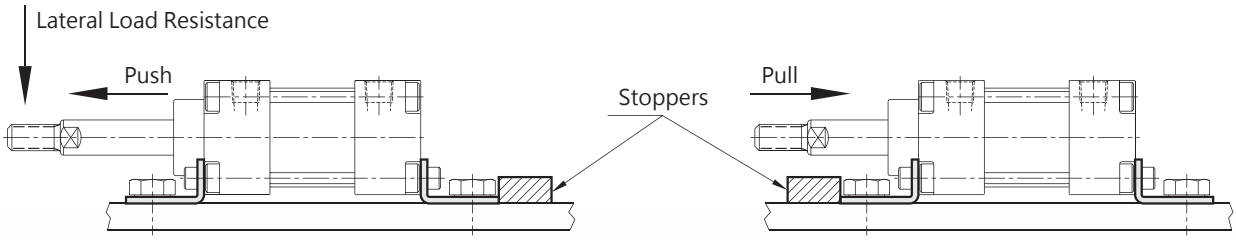

Hinge Bracket

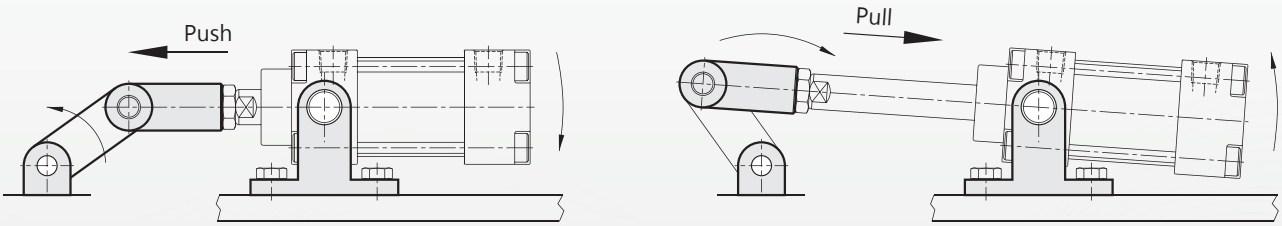

DAL Rod End Accessories

Y Joint (With PIN)

I Joint

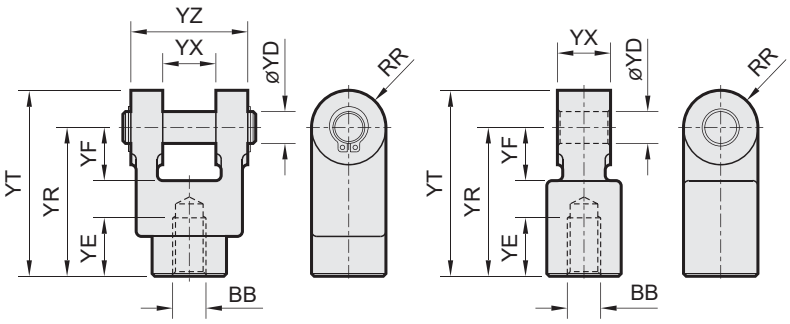

Unit : mm

Label / Bore Size	YX	YZ	YE	YF	YR	øYD	RR	BB	YT
ø40	20	44	22	20	56	12	14	M12×1.25	70
ø50	20	44	30	20	56	12	14	M16×1.5	70
ø63	20	44	30	20	56	12	14	M16×1.5	70
ø80	30	62	37	31	68	20	20	M20×1.5	88
ø100	30	62	37	31	68	20	20	M20×1.5	88
ø125	30	68	40	36	※	25	25	M32×2	※
ø150	40	82	45	40	85	25	27	M36×2	112

※Y Joint :**YR**-77.5 / **YT**-104
I Joint :**YR**-80 / **YT**-105

P Type Fish eye joint

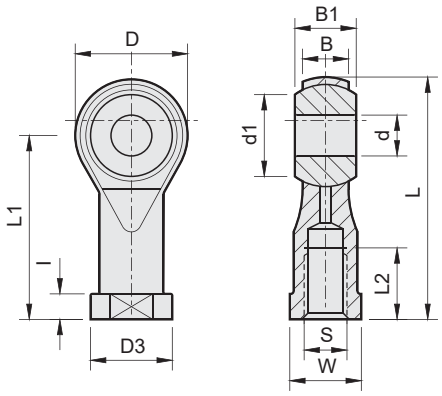

Unit : mm

Label / Bore Size	d	S	D	B	B1	d1	L	L1	L2	W	D3	l
PHS 12	12	M12×1.25	30	12	16	15.4	65	50	24	19	22	6.5
PHS 16	16	M16×1.5	38	15	21	19.4	83	64	33	22	27	8
PHS 20	20	M20×1.5	46	18	25	24.4	100	77	40	30	34	10

T Type Float Joint

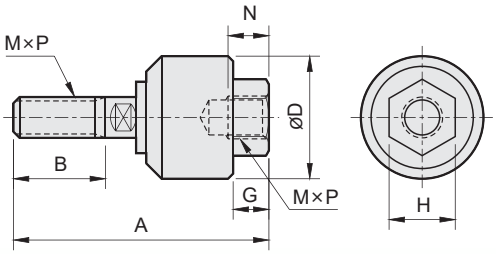

Unit : mm

Label / Bore Size	M×P	A	B	N	øD	G	H
KG-1012T	M12×1.25	58	21.5	9	28	8	17
KG-1016T	M16×1.5	90	27	14	45	12	27
KG-1020T	M20×1.5	102	29	18	53	14	33

Mounting Nut

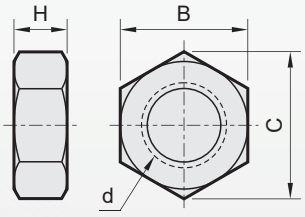

Unit : mm

d	B	C	H
M12×1.25	19	21.9	7
M16×1.5	24	27.7	8
M20×1.5	27	31.2	8
M32×2	41	47.3	10