2 Hydraulic drives

Standard Series

◎Compact Hydraulic Cylinder 3.5MPa / **HJ2**

HINAKA

HJ2 Ordering Guidelines

Ordering Guidelines

HJ2 D - 50 M 15 F - FA - Y - G51R 2

1. Model

2. Hydraulic Cylinder Type

HJ2 基本型	**HJ2E** 雙軸行程可調型
HJ2D 雙軸型	

3. Hydraulic Cylinder Bore Size

4. Sensor Device
M: With Magnet / N: Without Magnet

5. Stroke (ST)

6. Rod Structure
F: Female Thread / E: Male Thread

7. Mountings Accessories

SD	**FA**
FB	**CA**
CB	**LZ**
LA	**TI**

8. Rod End Accessories

I	**P**
Y	**T**

9. . Sensor Type
(Refer to Section 8 Accessories: Sensor Devices)

10. Number of Sensors

Internal Structure(Standard)

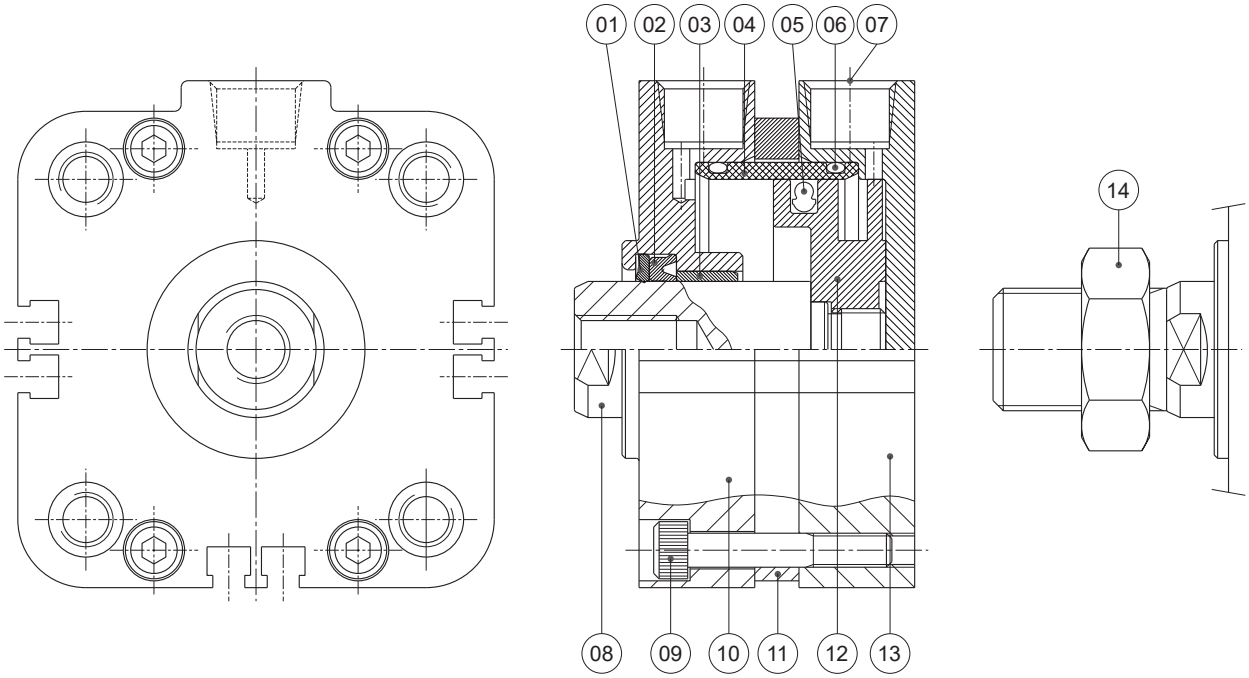

Components :

Item	Part Name	Material	Item	Part Name	Material
1	Wiper Ring	Teflon	8	Piston Rod	S45C
2	U-ring	PU	9	Tie Rod Bolts	SCM435
3	Self-oiling Bearing	Powder Metallurgy	10	Front Cap	AA6061
4	Cylinder Tube	STM13	11	Outer Bush	AA6063
5	8-ring	NBR	12	Piston Ring	AA6061
6	O-Ring	NBR	13	Rear Cap	AA6061
7	Plastic Plug	PU	14	Hex Nut	SS400

Applicable Conditions :

Version	**HJ2** (Without Sensor)	**HJ2+M** (With Sensor)
Bore Size (mm)	ø32, ø40, ø50, ø63, ø80, ø100	
Standard Strokes	5, 10, 15, 20, 25, 30, 35, 40, 45, 50 (Other strokes order separately)	
Working Pressure	3.5MPa (35.7 kgf/cm^2)	
Test Pressure	7.0MPa (70 kgf/cm^2)	
Minimum Operating Pressure	0.3MPa (3.06 kgf/cm^2)	
Operating Speed Range	8~300 mm/s	
Temperature Range	-10℃～+80℃	
Working Fluid	Ordinary mineral working oil (ISO VG32)	

Internal Structure(Guide Plate)

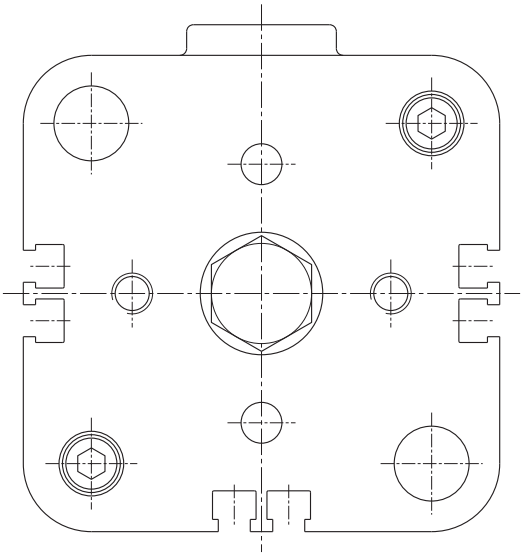

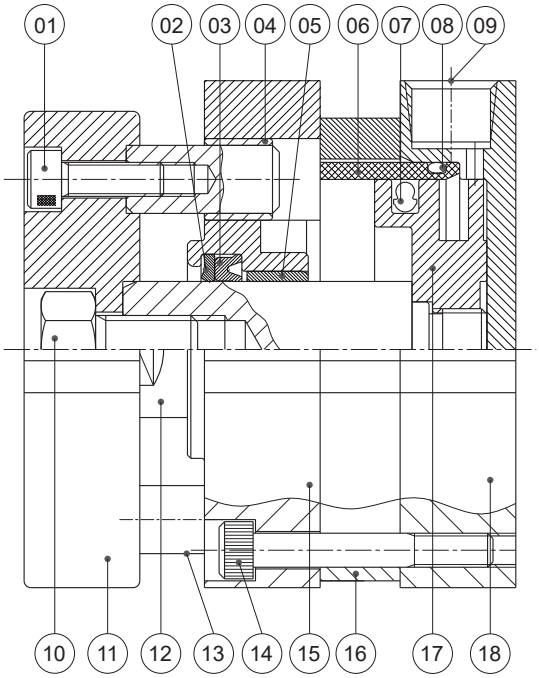

Components：

Item	Part Name	Material	Item	Part Name	Material
1	Hexagon Socket Head Cap Screw	SCM435	10	Hex Nut	SCM435
2	Back-up Ring	Teflon	11	Guide Plate	A6063
3	U-ring	PU	12	Piston Rod	S45C
4	Guide Rod Liner	Powder Metallurgy	13	Guide Rod	S45C
5	Self-oiling Bearing	Powder Metallurgy	14	Tie Rod Bolts	SCM435
6	Cylinder Tube	STM13	15	Front Cap	AA6061
7	8-ring	NBR	16	Outer Bush	AA6063
8	O-Ring	NBR	17	Piston Ring	AA6061
9	Plastic Plug	PU	18	Rear Cap	AA6061

Feature Description：

Model：HJ2
Standard Type

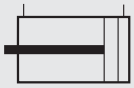

Model：HJ2..M
Standard with Magnetic

HJ2 (Standard- Female Thread-F)

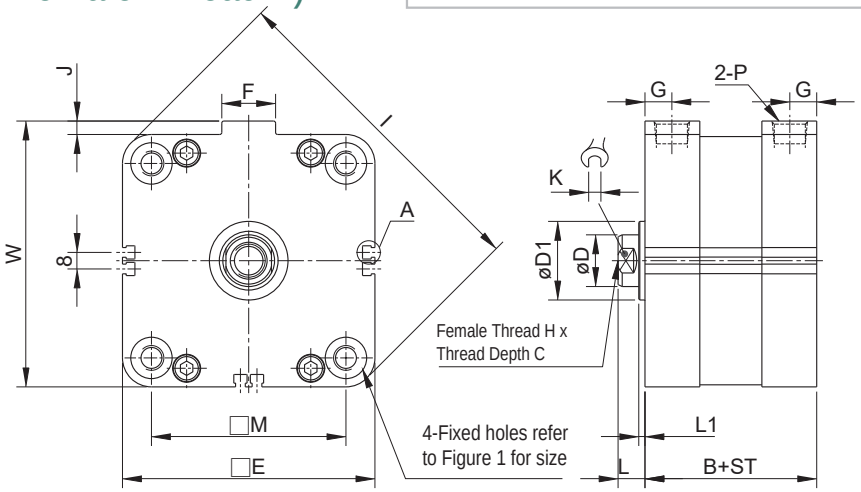

HJ2 (Standard- Male Thread-E)

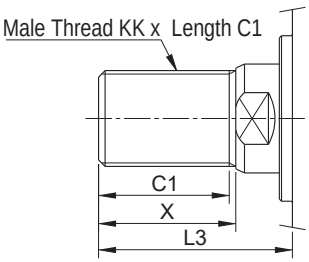

Fixed Hole Figure 1

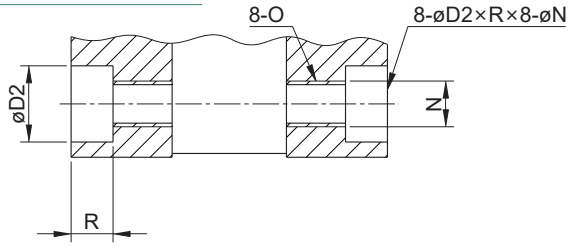

Detailed Diagram A

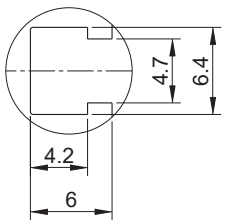

ST=Stroke Unit：mm

Label / Bore Size	B Standard	B Magnetic	øD	øD1	□E	F	G	H×C	I	J	K	L	L1	□M	P	W	KK	C1	X	L3	øD2×R×øN	O
ø32	23	30	16	26	51	20	5.5	M8×1.25×12	65	3.5	14	8.5	2.5	34	PT1/8	54.5	M14×1.5	20	21.5	30	9×5.2×5.1	M6×1.0
ø40	29.5	29.5	16	28	59	20	8	M8×1.25×13	76	3.5	14	8.5	2.5	40	PT1/8	62.5	M14×1.5	20	21.5	30	9×5.2×5.1	M6×1.0
ø50	30.5	30.5	20	32	70	22	9.5	M10×1.5×15	91	4.5	17	9.5	2.5	50	PT1/4	74.5	M18×1.5	23	25.5	35	11×6.5×6.7	M8×1.25
ø63	36	36	20	32	83	22	10	M10×1.5×18	108	4.5	17	9.5	2.5	60	PT1/4	87.5	M18×1.5	23	25.5	35	13.5×8.5×8.5	M10×1.5
ø80	43.5	43.5	25	36	102	26	12	M16×2.0×21	133	6.5	22	13	3	77	PT3/8	108.5	M22×1.5	30	31.5	44.5	18×11×10.25	M12×1.75
ø100	53	53	25	38	122	26	13	M16×2.0×21	161	6.5	22	13	3	94	PT3/8	128.5	M22×1.5	30	31.5	44.5	20×11×10.25	M12×1.75

※ Refer to Standard Type for other dimensions.

HJ2D

Feature Description：

Model：HJ2D
Dual Rod Type

Model：HJ2D..M
Dual Rod Magnetic Type

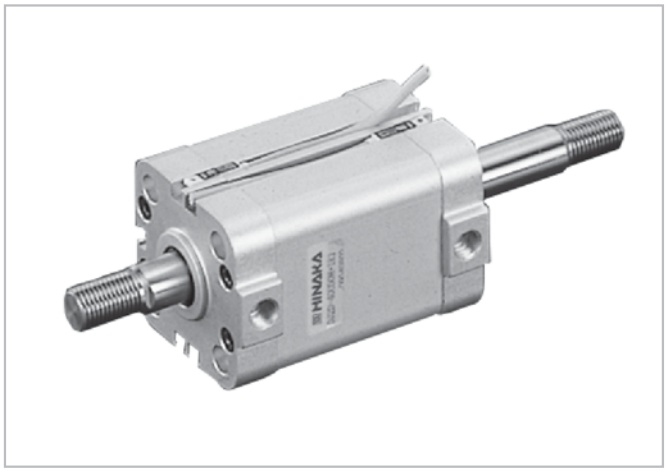

HJ2D (Dual Rod - Female Thread-F)

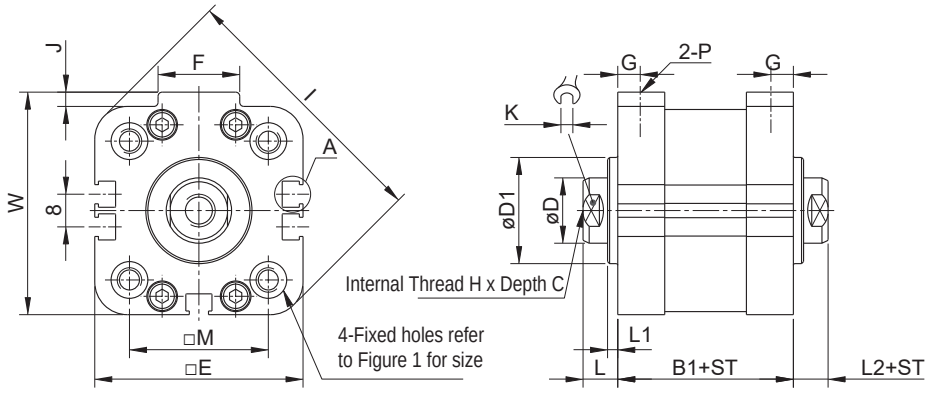

HJ2D (Dual Rod - Male Thread-E)

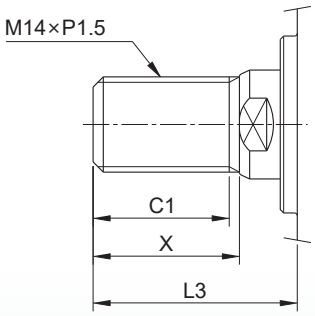

Fixed Hole Figure 1

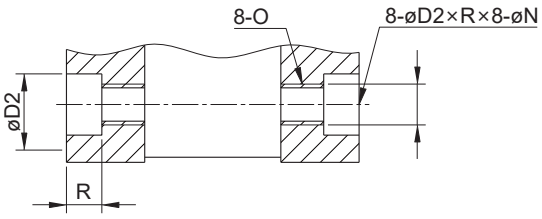

Detailed Diagram A

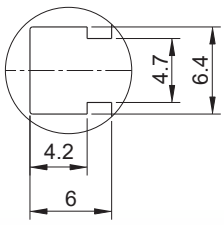

ST=Stroke
Unit：mm

Label / Bore Size	B1	
	Standard	Magnetic
ø32	30.5	37.5
ø40	39	39
ø50	41.5	41.5
ø63	48	48
ø80	56	56
ø100	66.5	66.5

※ Refer to Standard Type for other dimensions.

Feature Description：

Model：HJ2E
Adjustable Dual Rod Type

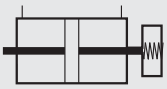

Model：HJ2E..M
Adjustable Dual Rod Stroke with Guide

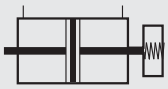

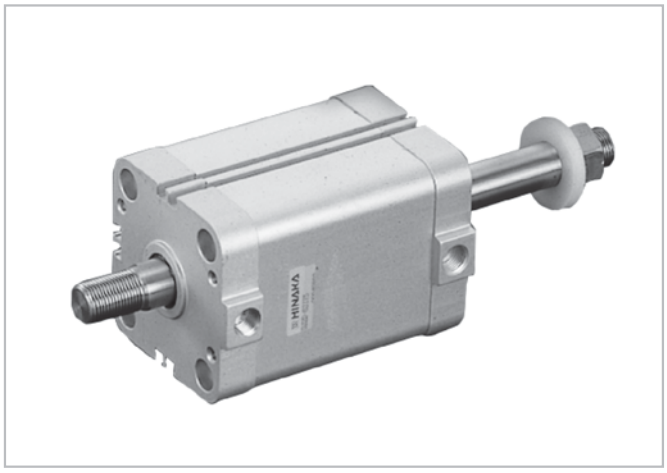

HJ2E (Adjustable Dual Rod Type)

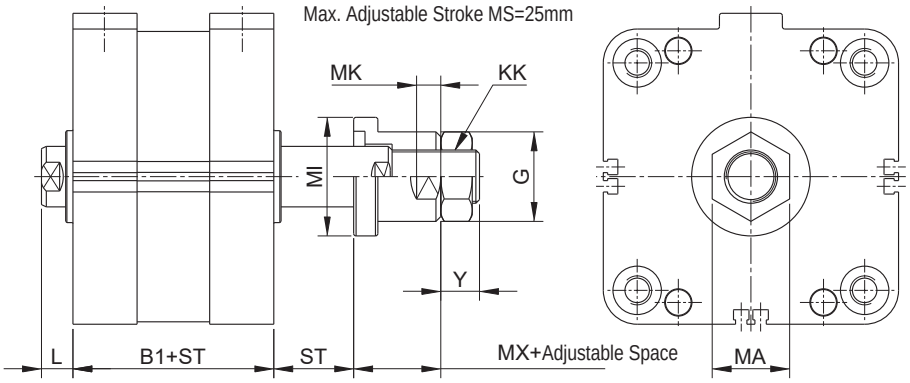

ST=Stroke Unit：mm

Label / Bore Size	B1		øG	Y	MA	øMI	MX	T	MK	KK
	Standard	Magnetic								
ø32	30.5	37.5	27	11	24	38	23.5	14	10	M14×1.5
ø40	39	39	27	11	24	38	23.5	14	10	M14×1.5
ø50	41.5	41.5	31	14	27	42	28.5	17	10	M18×1.5
ø63	48	48	31	14	27	42	28.5	17	10	M18×1.5
ø80	56	56	37	16	32	49	36	24	10	M22×1.5
ø100	66.5	66.5	37	16	32	49	36	26	10	M22×1.5

※ Refer to Standard Type for other dimensions.

HJ2 Mounting Accessories

FA/FB Type

Front Flange Mount HJ2 (Standard Type)
Rear Flange Mount HJ2..M (Magnetic Type)
ø32~100 (Both female and male threads)

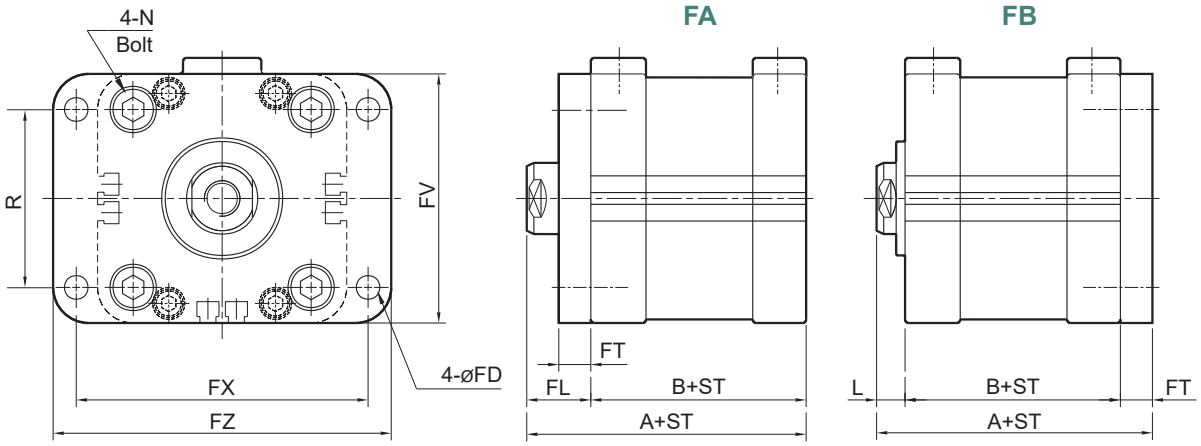

ST=Stroke Unit : mm

Label / Bore Size	A		B		FL	N	øFD	FT	FV	FX	FZ	R
	Standard	Magnetic	Standard	Magnetic								
ø32	39.5	46.5	23	30	16.5	M6×1.0	6.6	8	51	62	74	34
ø40	46	46	29.5	29.5	16.5	M6×1.0	6.6	8	59	72	84	40
ø50	49	49	30.5	30.5	18.5	M8×1.25	6.6	9	70	82	95	50
ø63	54.5	54.5	36	36	18.5	M10×1.5	9	9	83	98	110	60
ø80	67.5	67.5	43.5	43.5	24	M12×1.75	11	11	102	120	138	78
ø100	77	77	53	53	24	M12×1.75	11	11	122	140	158	94

LA Type

Side Foot Mount HJ2 (Standard Type)
(Both female and male threads) HJ2..M (Magnetic Type)
ø32~100

LZ Type

Vertical Bar Mount HJ2 (Standard Type)
(Both female and male threads) HJ2..M (Magnetic Type)
ø32~100

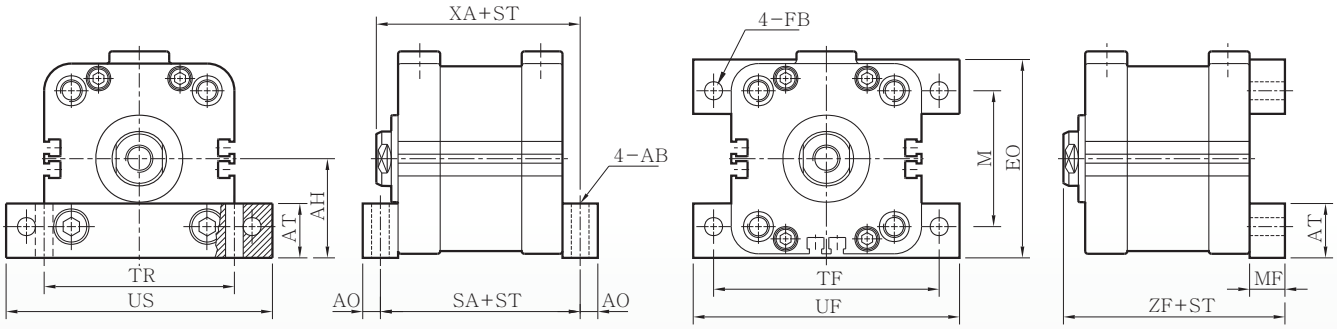

ST=Stroke Unit : mm

Label / Bore Size	SA		XA		ZF		øAB	AH	AO	AT	EO	øFB	MF	M	TF	TR	UF/US
	Standard	Magnetic	Standard	Magnetic	Standard	Magnetic											
ø32	35	42	37.5	44.5	43.5	50.5	5.5	26	6	18	52	5.5	12	34	62	52	74
ø40	42.5		44.5		51		5.5	30	6.5	20	60	5.5	13	40	70	58	82
ø50	43.5		46.5		53		6.5	37	6.5	20	73	6.5	13	50	83	70	98
ø63	52		53.5		61.5		9	42	8	24	84	9	16	60	99	82	114
ø80	59.5		64.5		72.5		9	51	8	24	102	9	16	77	119	100	134
ø100	71		75		84		11	61	9	28	122	11	18	94	140	122	158

CA/CB Type

Single Clevis HJ2 (Standard)
Double Clevis HJ2..M (Magnetic Type)

ø32~100 (Both female and male threads)

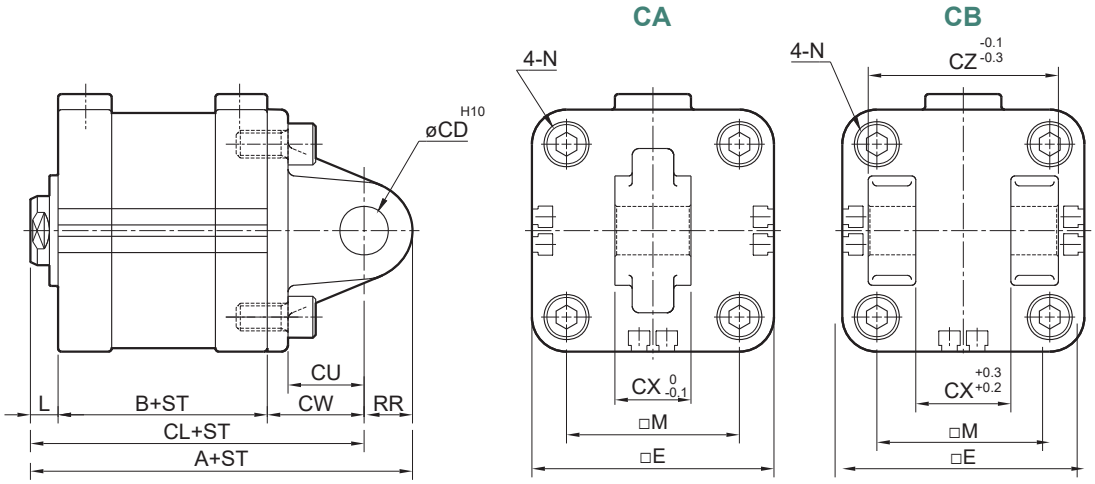

ST=Stroke Unit : mm

Label / Bore Size	A		CL		øCD	CU	CW	CX	CZ	RR
	Standard	Magnetic	Standard	Magnetic						
ø32	61.5	68.5	51.5	58.5	10	15	20	18	36	10
ø40	70	70	60	60	10	16	22	18	36	10
ø50	82	82	68	68	14	22	28	22	44	14
ø63	89.5	89.5	75.5	75.5	14	23	30	22	44	14
ø80	112.5	112.5	94.5	94.5	18	28	38	28	56	18
ø100	133	133	111	111	22	33	45	28	56	22

TI Type

Rear Bar Hinge HJ2 (Standard)
HJ2..M (Magnetic Type)

ø32~100 (Both female and male threads)

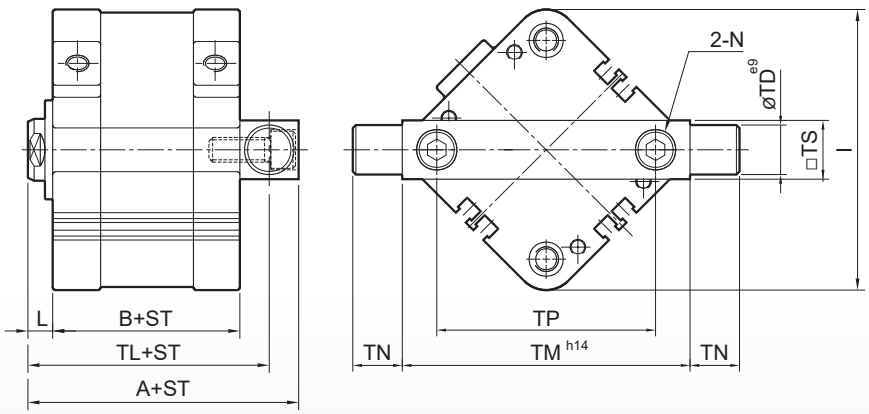

ST=Stroke Unit : mm

Label / Bore Size	A		TL		øTD e9	TM h14	TN	TP	□TS	I
	Standard	Magnetic	Standard	Magnetic						
ø32	47.37	54.37	45.43	65.43	12	67	12	48.07	15.87	65.5
ø40	57	57	53.5	53.5	16	78	16	56.56	19	75.6
ø50	59	59	57.5	57.5	16	93	16	70.7	19	90.7
ø63	67.5	67.5	64.5	64.5	20	110	20	84.84	22	107.9
ø80	81.9	81.9	79.2	79.2	20	135	20	108.87	25.4	134.3
ø100	91.5	91.5	88.7	88.7	25	163	25	132.9	25.4	160.9

IJoint ø32~100

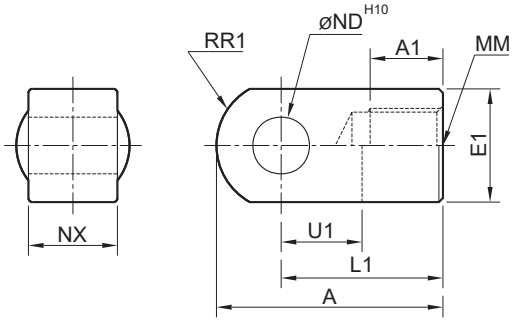

Unit : mm

Label / Bore Size	A	A1	E1	L1	MM	RR1	U1	øND	NX
ø32	42	14	22	30	M14×1.5	12	14	10	18
ø40	42	14	22	30	M14×1.5	12	14	10	18
ø50	56	18	28	40	M18×1.5	16	20	14	22
ø63	56	18	28	40	M18×1.5	16	20	14	22
ø80	71	21	38	50	M22×1.5	21	27	18	28
ø100	71	21	38	50	M22×1.5	21	27	22	28

YJoint ø32~100

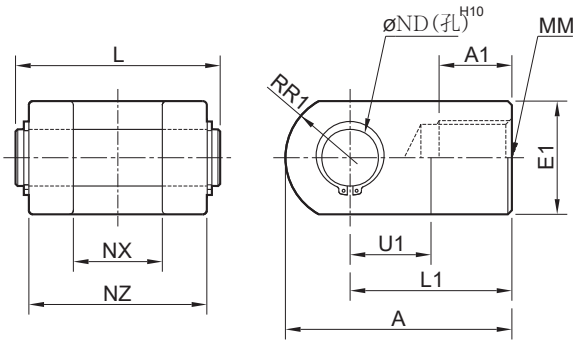

Unit : mm

Label / Bore Size	A	A1	øE1	L1	MM	RR1	U1	øND	NX	NZ	L
ø32	42	14	22	30	M14×1.5	12	14	10	18	36	41.6
ø40	42	14	22	30	M14×1.5	12	14	10	18	36	41.6
ø50	56	18	28	40	M18×1.5	16	20	14	22	44	50.6
ø63	56	18	28	40	M18×1.5	16	20	14	22	44	50.6
ø80	71	21	38	50	M22×1.5	21	27	18	28	56	64
ø100	71	21	38	50	M22×1.5	21	27	22	28	56	64