2 Hydraulic drives

Standard Series

◎5MPa / **5H**

HINAKA

5H Ordering Guidelines

Ordering Guidelines

5H - SD - 40 M 50 Y - B - A - PPV

1. Model
   (Hydraulic Cylinder Series working pressure within 51kgf/cm)

2. Mounting Type

SD Standard	**CA** Single Clevis Type
LA Side End Base Mount	**CB** Double Clevis Type
LB Foot Bracket	**TA** Front Trunnion Mount
FA Front Flang	**TC** Central Trunnion
FB Rear Flange	

3. Hydraulic Cylinder Bore Size
   Standard : **ø32** 、**ø40** 、**ø50** 、**ø63** 、**ø80** 、**ø100**

4. Sensor Device (ø32 Series without sensor)
   M: With Magnet / **N**: Without Magnet

5. Stroke (ST)

6. Rod End Accessories

I I Joint	**Y** Y Joint
T Trunnion Mounting Bracket	

7. Oil Port Positions **A** 、**B** 、**C** 、**D**

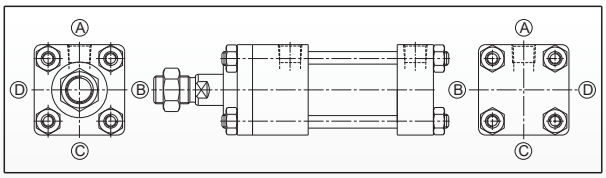

8. Buffer Adjustment Valve Position **A** 、**B** 、**C** 、**D**

9. Buffer Function Label
   Unmarked : No buffer / **PPV**: Both Ends / **FPPV**: Front / **RPPV**: Rear

Internal Structure (Basic Type)

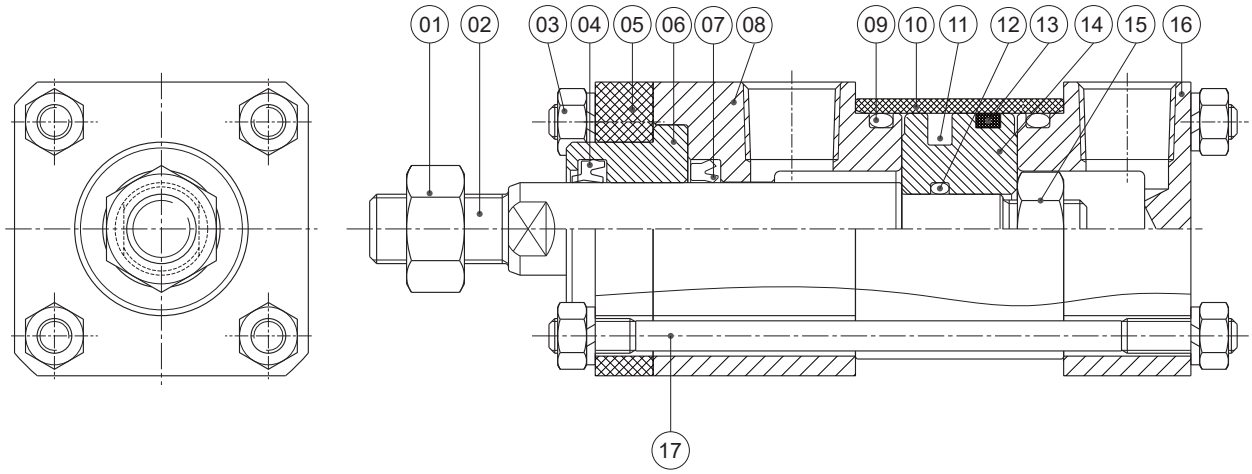

Components：

Item	Part Name	Material	Item	Part Name	Material
1	Hex Nut	SS400	10	Cylinder Tube	STKM13
2	Piston Rod	S45C	11	Piston Ring	PU+NBR
3	Hex Nut	SS400	12	O-Ring	NBR
4	Hex Nut	PU	13	Wear Ring	Copper powder + wear resistant powder
5	Shaft Liner Fixed Plate	SS400	14	Piston Body	SS400
6	Shaft Liner	BC6	15	Hex Nut	SS400
7	U-ring	PU	16	Rear Cap	SS400
8	Front Cap	SS400	17	Tie-rod	SS41
9	O-Ring	NBR			

5H Internal Structure (Buffer Type)

Internal Structure (Buffer Type)

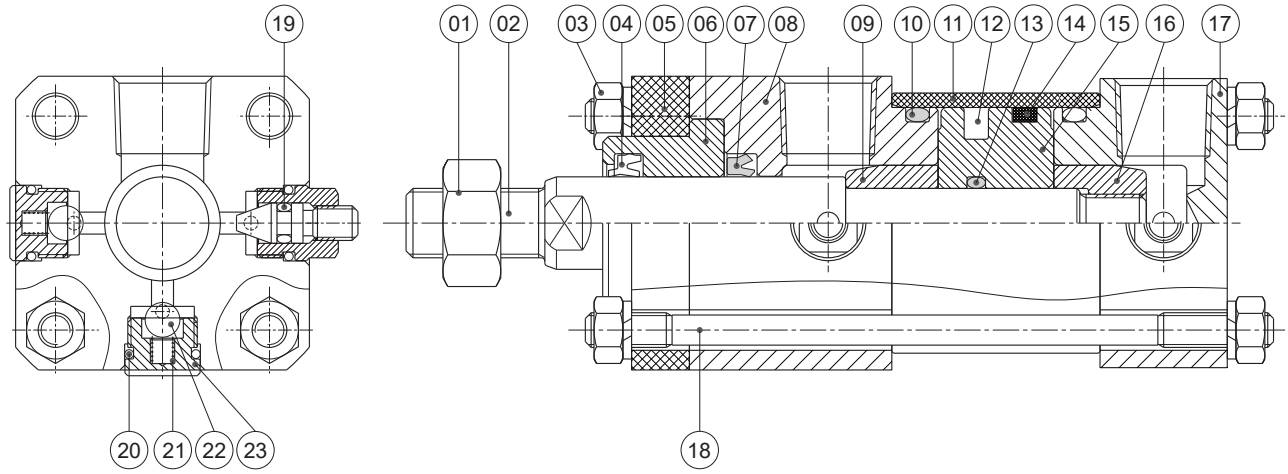

Components：

Item	Part Name	Material	Item	Part Name	Material
1	Hex Nut	SS400	13	O-Ring	NBR
2	Piston Rod	S45C	14	Wear Ring	Copper powder + wear resistant powder
3	Hex Nut	SS400	15	Piston Body	SS400
4	Wiper Seal	PU	16	Rear Buffering Piston	FC25
5	Shaft Liner Fixed Plate	SS400	17	Rear Cap	SS400
6	Shaft Liner	BC6	18	Tie Rod	SS41
7	U-ring	PU	19	O-ring	NBR
8	Front Cap	SS400	20	O-ring	NBR
9	Front Buffering Piston	FC25	21	Spring	SWP
10	O-Ring	NBR	22	Steel Ball	SUJ2
11	Cylinder Tube	ST52	23	Non-Return Valve	S45C
12	Piston Ring	PU+NBR			

Specifications：

Item \ Type	5H(Without Sensor)	5H+M(With Sensor)
Bore Size	ø32,ø40,ø50,ø63,ø80,ø100	
Minimum Operating Pressure	0.3MPa(3.06 kgf/cm^2)	
Maximum Operating Pressure	5MPa(51 kgf/cm^2)	
Proof Pressure	7.0MPa(71.4 kgf/cm^2)	
Operating Speed Range	8~400mm/s	
Temperature Range	-10°C~+80°C	
Working Fluid	Ordinary mineral working oil (ISO VG32)	

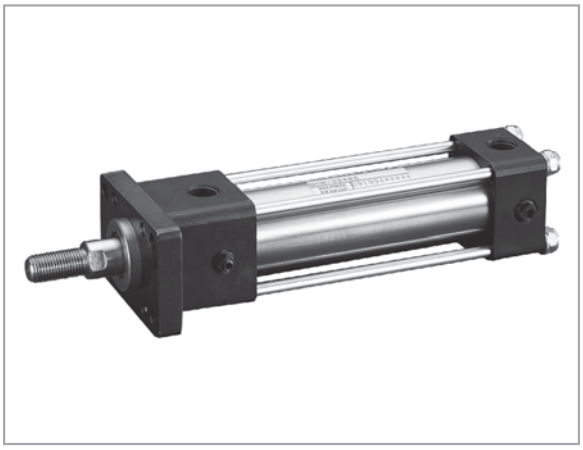

Standard Type (SD)

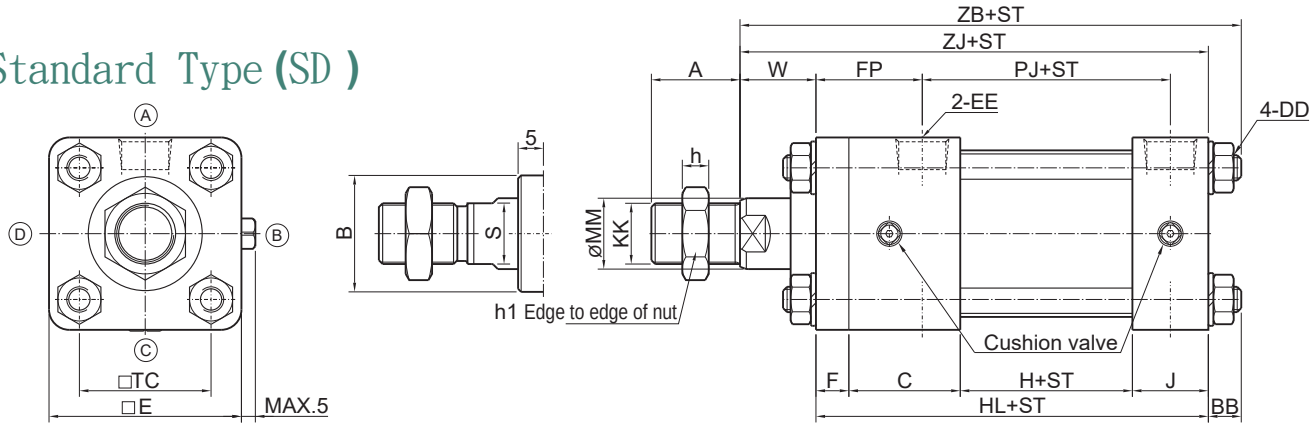

(Rod diameter B specification) ST=Stroke Unit : mm

Label / Bore Size	A	øB	KK	øMM	S	BB	DD	□E	EE	F	FP	C	H	HL	J	PJ	TC	W	ZJ	ZB	h	h1
ø32	24	30	M12×1.25	16	13	8	M6×1.0	44.5	PT1/4	10	34	35	36	103	22	58	33	15	118	126	10	19
ø40	24	30	M12×1.25	16	13	8	M6×1.0	50.8	PT3/8	10	34	35	36	103	22	58	37	15	118	126	10	19
ø50	36	34	M18×1.5	22.4	19	7	M6×1.0	62	PT3/8	10	34	35	36	103	22	58	47	15	118	125	15	27
ø63	36	34	M18×1.5	22.4	19	9	M8×1.25	76	PT3/8	10	34	35	39	106	22	61	56	15	121	130	15	27
ø80	48	42	M24×2.0	28	24	10	M10×1.5	94	PT1/2	16	43	40	41	124	27	67	70	19	143	153	16	30
ø100	60	50	M30×2.0	35	30	12	M12×1.25	114	PT1/2	16	43	40	41	124	27	67	89	23	147	159	24	45
ø125	84	60	M42×2.0	45	41	16	M16×1.25	138	PT1/2	20	27	40	47	134	27	73	110	45	159	75	22	60

Double Rod Type

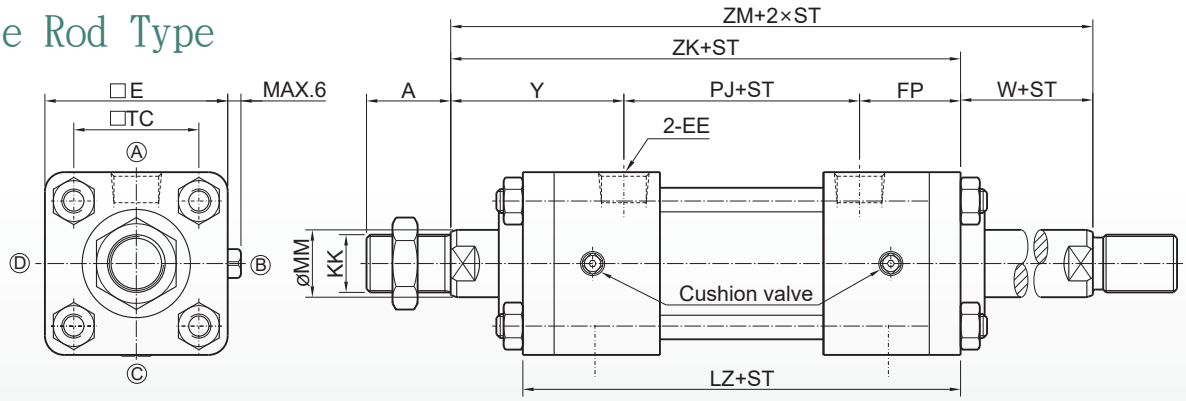

ST=Stroke Unit : mm

Label / Bore Size	A	KK	øMM	□E	EE	FP	W	LZ	PJ	TC	Y	ZK	ZM
ø32	24	M12×1.25	16	44.5	PT1/4	34	15	126	58	33	49	141	156
ø40	24	M12×1.25	16	50.8	PT3/8	34	15	126	58	37	49	141	156
ø50	36	M18×1.5	22.4	62	PT3/8	34	15	126	58	47	49	141	156
ø63	36	M18×1.5	22.4	76	PT3/8	34	15	129	61	56	49	144	159
ø80	48	M24×2.0	28	94	PT1/2	43	19	153	67	70	62	172	191
ø100	60	M30×2.0	35	114	PT1/2	43	23	153	67	89	66	176	199

※ Refer to Standard Type for other dimensions.

FA Type Front Flange Mounting

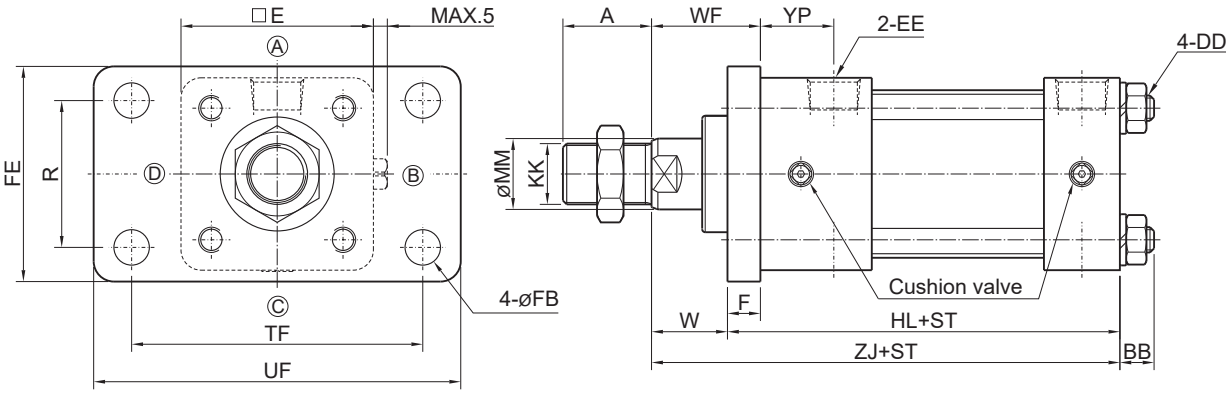

ST=Stroke Unit : mm

Label / Bore Size	A	KK	øMM	BB	□E	EE	F	øFB	FE	HL	R	TF	UF	W	YP	ZJ	DD	WF
ø32	24	M12×1.25	16	8	44.5	PT1/4	10	7	47	103	33	58	72	15	24	118	M6×1.0	25
ø40	24	M12×1.25	16	8	50.8	PT3/8	10	7	52	103	36	70	84	15	24	118	M6×1.0	25
ø50	36	M18×1.5	22.4	7	62	PT3/8	10	9	65	103	47	86	104	15	24	118	M6×1.0	25
ø63	36	M18×1.5	22.4	9	76	PT3/8	10	9	76	106	56	98	116	15	24	121	M8×1.25	25
ø80	48	M24×2.0	28	10	94	PT1/2	16	12	95	124	70	119	143	19	27	143	M10×1.5	35
ø100	60	M30×2.0	35	12	114	PT1/2	16	14	115	124	84	140	166	23	27	147	M12×1.25	39

※ Refer to Standard Type for other dimensions.

FB Type Type Rear Flange Mounting

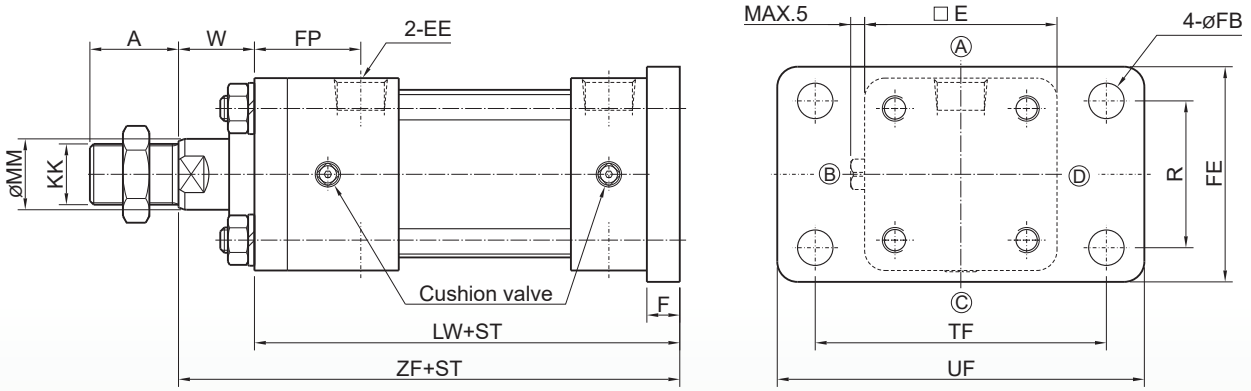

ST=Stroke Unit : mm

Label / Bore Size	A	KK	øMM	□E	EE	F	øFB	FE	FP	LW	R	TF	UF	W	ZF
ø32	24	M12×1.25	16	44.5	PT1/4	10	7	47	34	113	33	58	72	15	128
ø40	24	M12×1.25	16	50.8	PT3/8	10	7	52	34	113	36	70	84	15	128
ø50	36	M18×1.5	22.4	62	PT3/8	10	9	65	34	113	47	86	104	15	128
ø63	36	M18×1.5	22.4	76	PT3/8	10	9	76	34	116	56	98	116	15	131
ø80	48	M24×2.0	28	94	PT1/2	16	12	95	43	140	70	119	143	19	159
ø100	60	M30×2.0	35	114	PT1/2	16	14	115	43	140	84	140	166	23	163

※ Refer to Standard Type for other dimensions.

LA Type Side Foot Mount

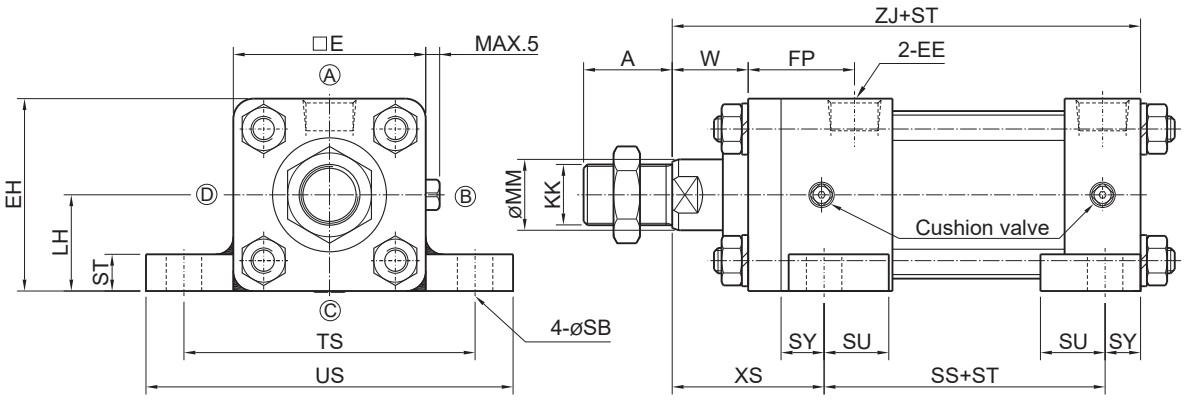

ST=Stroke Unit : mm

Label / Bore Size	A	KK	øMM	□E	EE	EH	FP	LH	SB	SS	T	SU	SY	TS	US	W	XS	ZJ
ø32	24	M12×1.25	16	44.5	PT1/4	45	34	22.5 $^{-0.31}_{-0.38}$	9	73	8	18	9	69	84	15	35	118
ø40	24	M12×1.25	16	50.8	PT3/8	50.8	34	25 $^{-0.30}_{-0.40}$	12	73	8	24	10	80	100	15	35	118
ø50	36	M18×1.5	22.4	62	PT3/8	62	34	31 $^{-0.31}_{-0.41}$	12	73	12	24	9	92	112	15	35	118
ø63	36	M18×1.5	22.4	76	PT3/8	76	34	38 $^{-0.31}_{-0.41}$	12	76	12	24	9	108	128	15	35	121
ø80	48	M24×2.0	28	94	PT1/2	94	43	47 $^{-0.32}_{-0.42}$	14	82	19	32	12	128	150	19	48	143
ø100	60	M30×2.0	35	114	PT1/2	114	43	57 $^{-0.34}_{-0.46}$	18	72	24	21	17	154	182	23	57	147
ø125	84	M42×2.0	45	138	PT1/2	138	47	69 $^{-0.36}_{-0.48}$	22	78	29	27	17	189	224	25	63	158

※ Refer to Standard Type for other dimensions.

LB Type Side Foot Mount

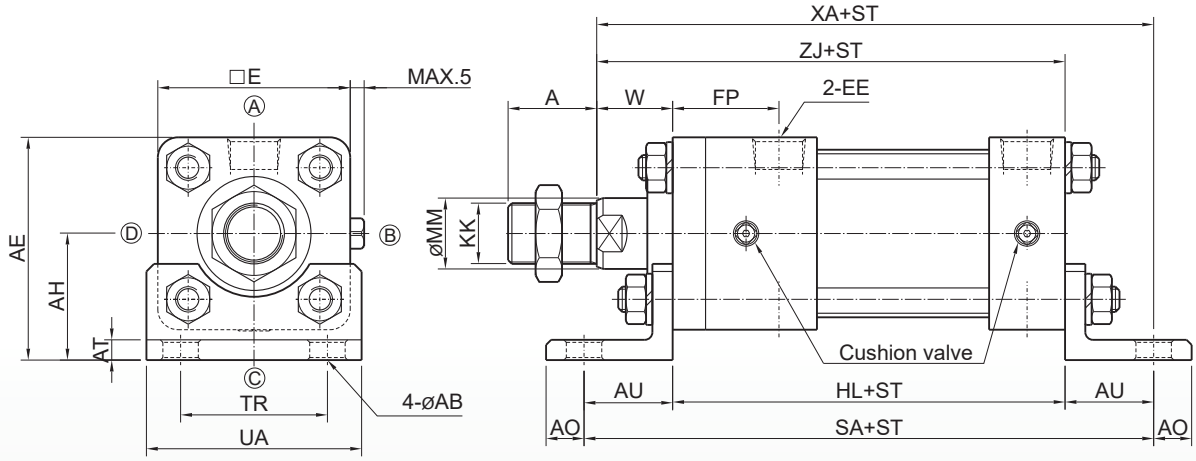

ST=Stroke Unit : mm

Label / Bore Size	A	KK	øMM	AB	AE	AH	AD	AT	AU	□E	EE	FP	HL	SA	TR	UA	W	XA	ZJ
ø32	24	M12×1.25	16	9	55.5	33	10	5	23	44.5	PT1/4	34	103	149	33	54	15	141	118
ø40	24	M12×1.25	16	12	60	35	12	5	25	50.8	PT3/8	34	103	153	37	60	15	143	118
ø50	36	M18×1.5	22.4	12	72	41	12	6	26	62	PT3/8	34	103	155	47	70	15	144	118
ø63	36	M18×1.5	22.4	12	86	48	12	6	28	76	PT3/8	34	106	162	56	80	15	149	121
ø80	48	M24×2.0	28	14	106	59	14	8	34	94	PT1/2	43	124	192	70	97	19	177	143
ø100	60	M30×2.0	35	18	127	70	18	9	40	114	PT1/2	43	124	204	89	120	23	187	147

※ Refer to Standard Type for other dimensions.

CA Type Single Clevis Bracket

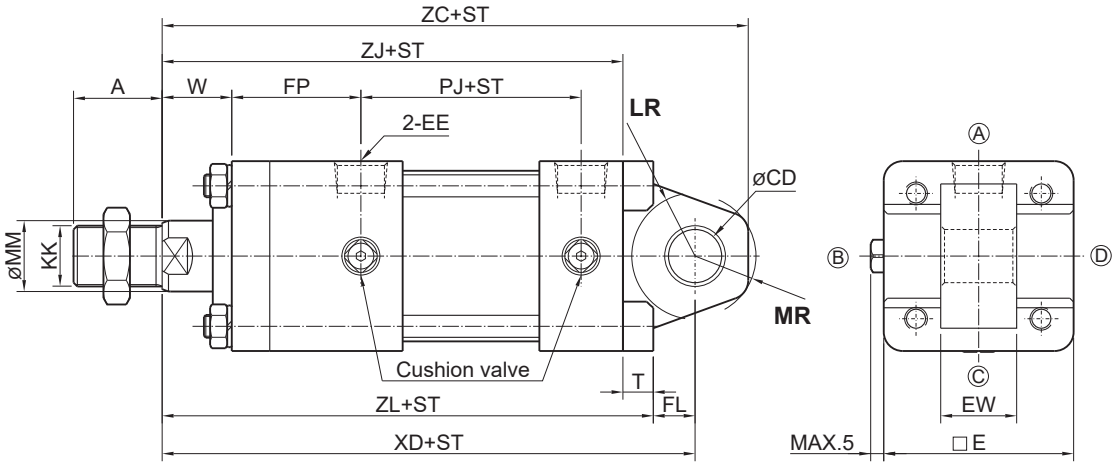

ST=Stroke Unit : mm

Label / Bore Size	A	KK	øMM	CD	□E	EE	EW	FL	FP	ZL	PJ	W	XD	ZC	T	LR	MR	ZJ
ø32	24	M12×1.25	16	12 H9	44.5	PT1/4	16 $^{0}_{-0.07}$	11	34	126	58	15	137	149	8	R17	R14	118
ø40	24	M12×1.25	16	14 H9	50.8	PT3/8	20 $^{0}_{-0.084}$	11	34	126	58	15	137	151	8	R17	R16	118
ø50	36	M18×1.5	22.4	14 H9	62	PT3/8	20 $^{0}_{-0.084}$	9	34	128	58	15	137	151	10	R19	R16	118
ø63	36	M18×1.5	22.4	14 H9	76	PT3/8	20 $^{0}_{-0.084}$	6	34	134	61	15	140	154	13	R19	R16	121
ø80	48	M24×2.0	28	20 H9	94	PT1/2	32 $^{0}_{-0.1}$	14	43	161	67	19	175	195	18	R26	R22	143
ø100	60	M30×2.0	35	25 H9	114	PT1/2	40 $^{0}_{-0.1}$	37	43	163	67	23	200	225	16	R32	R30	147

※ Refer to Standard Type for other dimensions.

CB Type Double Clevis Bracket Type

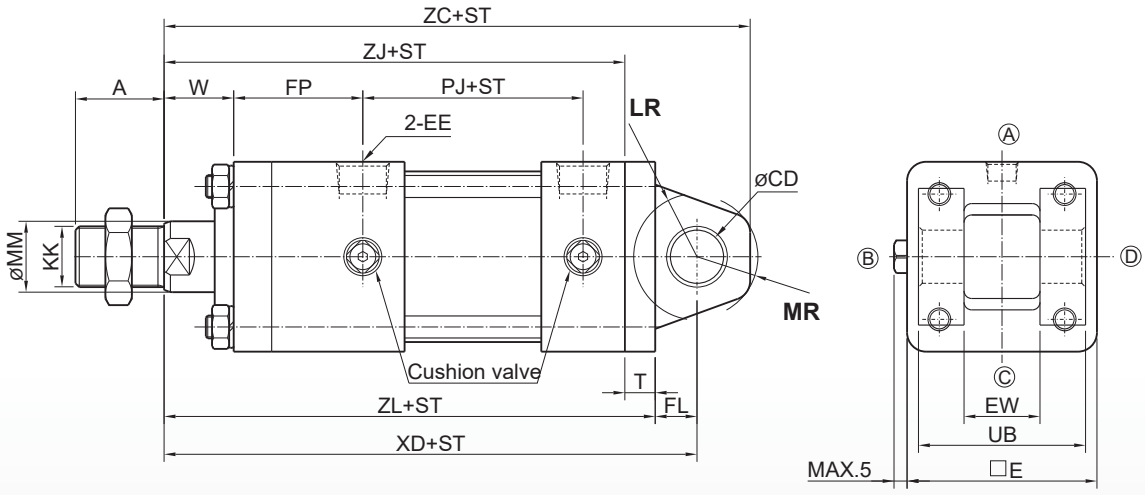

ST=Stroke Unit : mm

Label / Bore Size	A	KK	øMM	CD	□E	EE	EW	FL	FP	ZL	PJ	W	XD	ZC	T	LR	MR	ZJ	UB
ø32	24	M12×1.25	16	12 H9	44.5	PT1/4	16 $^{+0.7}_{+0.5}$	11	34	126	58	15	137	149	8	R17	R14	118	32
ø40	24	M12×1.25	16	14 H9	50.8	PT3/8	20 $^{+0.7}_{+0.5}$	11	34	126	58	15	137	151	8	R17	R15	118	44
ø50	36	M18×1.5	22.4	14 H9	62	PT3/8	20 $^{+0.7}_{+0.5}$	11	34	126	58	15	137	152	8	R19	R15	118	52
ø63	36	M18×1.5	22.4	14 H9	76	PT3/8	20 $^{+0.7}_{+0.5}$	11	34	129	61	15	140	154	8	R19	R15	121	52
ø80	48	M24×2.0	28	20 H9	94	PT1/2	32 $^{+0.7}_{+0.5}$	21	43	154	67	19	175	196	11	R26	R22	143	64
ø100	60	M30×2.0	35	25 H9	114	PT1/2	40 $^{+0.7}_{+0.5}$	37	43	163	67	23	200	225	16	R32	R28	147	80

※ Refer to Standard Type for other dimensions.

TA Type Front Trunnion Mount

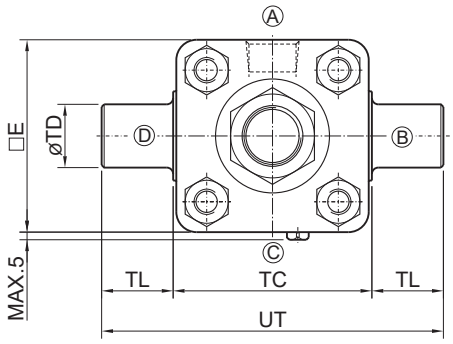

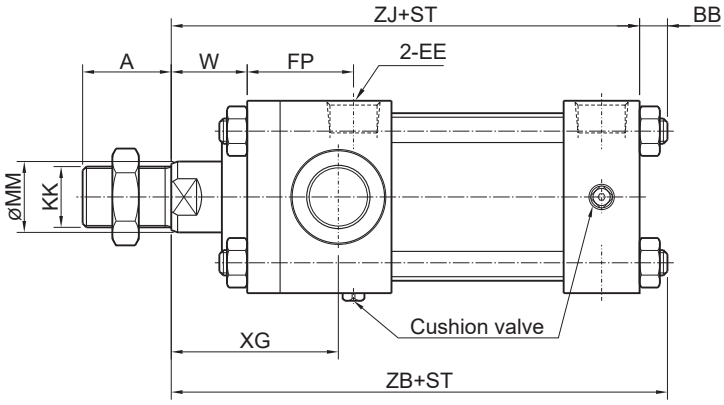

ST=Stroke Unit : mm

Label / Bore Size	A	KK	øMM	BB	□E	EE	FP	ZB	øTD	TC	TL	UT	W	XG	ZJ
ø32	24	M12×1.25	16	8	44.5	PT1/4	34	126	16 e9	45	16	77	15	44	118
ø40	24	M12×1.25	16	8	50.8	PT3/8	34	126	25 e9	50	25	100	15	44	118
ø50	36	M18×1.5	22.4	7	62	PT3/8	34	125	25 e9	63	25	113	15	44	118
ø63	36	M18×1.5	22.4	9	76	PT3/8	34	130	25 e9	76	25	126	15	44	121
ø80	48	M24×2.0	28	10	94	PT1/2	43	153	25 e9	95	25	145	19	57	143
ø100	60	M30×2.0	35	12	114	PT1/2	43	159	32 e9	114	32	178	23	61	147

※ Refer to Standard Type for other dimensions.
※ Position of TA Type buffer and exhaust valve are on side Ⓒ.

TC Type Center Trunnion Mount

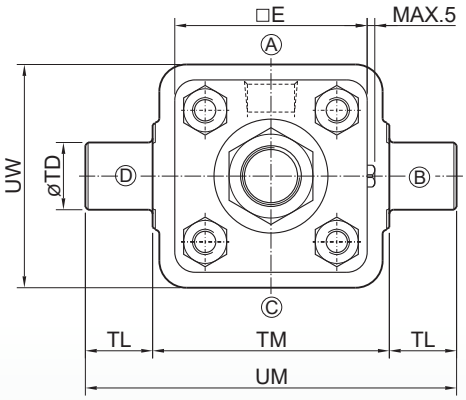

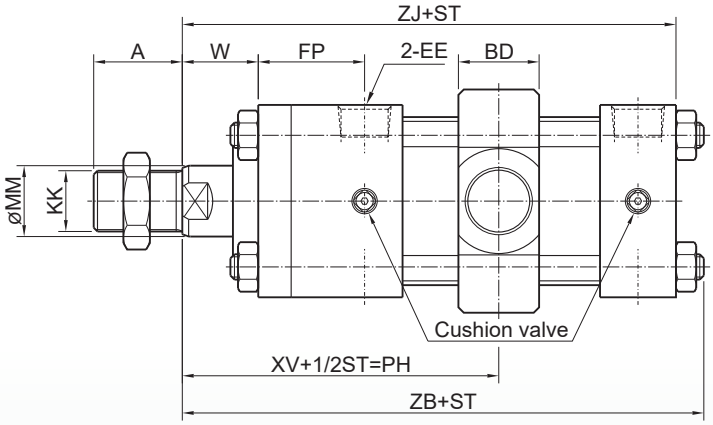

ST=Stroke Unit : mm

Label / Bore Size	A	KK	øMM	BD	□E	EE	FP	ZJ	øTD	TL	TM	UM	W	XV	ZB	UW	smallest PH
ø32	24	M12×1.25	16	30	44.5	PT1/4	34	118	16 e9	16	55	87	15	78	126	50	75
ø40	24	M12×1.25	16	30	50.8	PT3/8	34	118	25 e9	25	63	113	15	78	126	59	75
ø50	36	M18×1.5	22.4	30	62	PT3/8	34	118	25 e9	25	76	126	15	78	125	71	75
ø63	36	M18×1.5	22.4	30	76	PT3/8	34	121	25 e9	25	88	138	15	79.5	130	86	75
ø80	48	M24×2.0	28	30	94	PT1/2	43	143	25 e9	25	114	164	19	95.5	153	104	90
ø100	60	M30×2.0	35	40	114	PT1/2	43	147	32 e9	32	140	204	23	99.5	159	132	99

※ Refer to Standard Type for other dimensions.
※ When PH size changes, be attentive to the smallest PH size.

IJoint

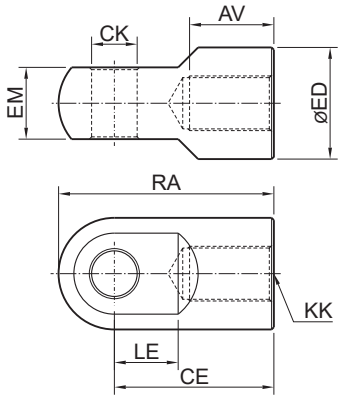

YJoint (With Pin)

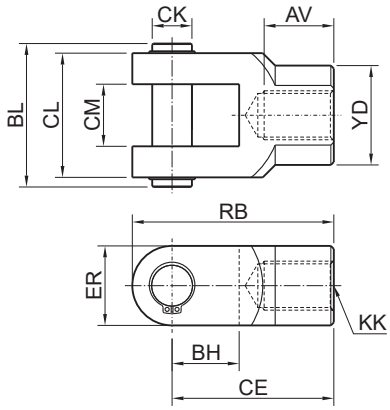

Unit : mm

Label / Bore Size	AV	KK	EM	ED	LE	CE	CK	RA	RB	CL	CM	BL	BH	ER	YD
ø32	25	M12×1.25	16 $^{0}_{-0.1}$	28	20	55	12 H9	69	67	32	16	40	20	24	30
ø40	25	M12×1.25	20 $^{0}_{-0.1}$	30	20	60	14 H9	75	72	44	20	52	20	24	34
ø50	37	M18×1.5	20 $^{0}_{-0.1}$	32	18	64	14 H9	80	78	44	20	54	18	28	34
ø63	37	M18×1.5	20 $^{0}_{-0.1}$	32	18	64	14 H9	80	78	44	20	54	18	28	34
ø80	49	M24×2.0	32 $^{0}_{-0.1}$	45	30	100	20 H9	122.5	119	64	32	75	28	38	50
ø100	61	M30×2.0	40 $^{0}_{-0.1}$	60	37	110	25 H9	140	135	80	40	90	35	50	60

T Type Trunnion Mounting Bracket

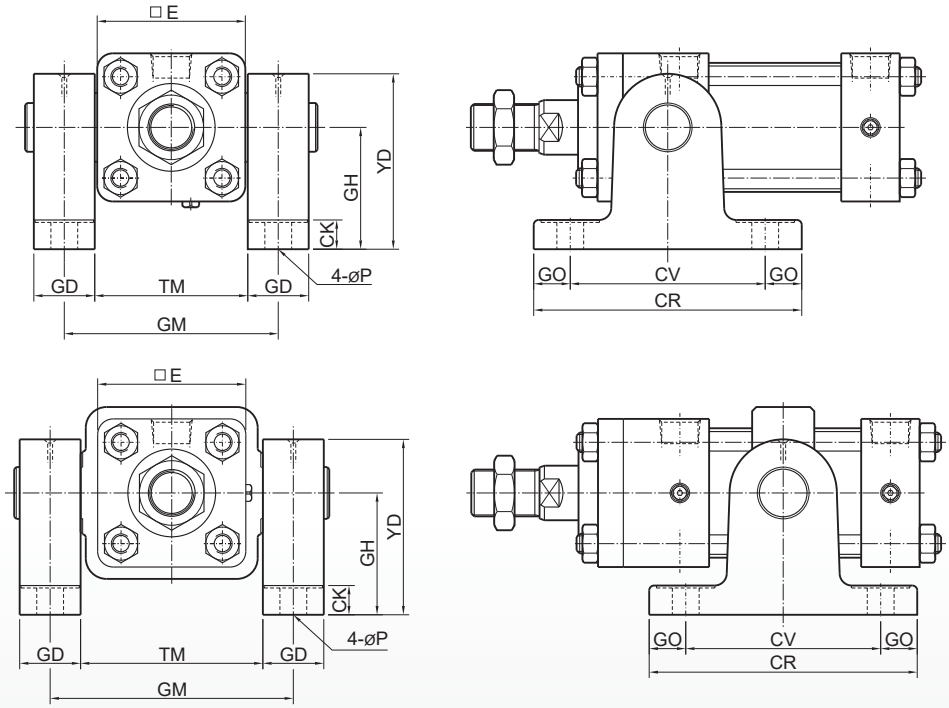

Unit : mm

Label / Bore Size	□E	P	GD	YD	GH	CR	CV	GO	CK	TM		GM	
										TA型	TC型	TA型	TC型
ø32	44.5	9	16	56	40	80	60	10	12	45	55	61	71
ø40	50.8	12	25	72	50	110	80	15	12	50	63	75	88
ø50	62	12	25	72	50	110	80	15	12	63	76	88	101
ø63	76	11	25	72	50	110	80	15	12	76	88	101	113
ø80	94	14	25	92	70	120	85	17.5	14	95	114	120	139
ø100	114	18	35	112	80	175	135	20	22	114	140	149	175