2 Hydraulic drives

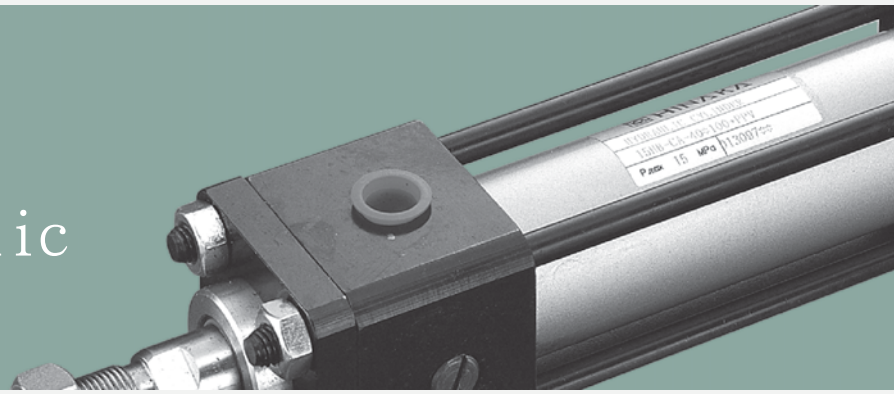

JIS Standard Compliance

◎14MPa / **15B**

HINAKA

15B Ordering Guidelines

Ordering Guidelines

15 B - SD - 40 M 50 Y - B - A - PPV

1. **Model**
   (Working Pressure within 142.8kgf/cm for Hydraulic Cylinder Series)

2. **Piston Rod (JIS8354 B Level Specifications)**
   B: B Specification Piston Rod / C Specification Piston Rod

3. **Mounting Type**

SD Standard	**FD** Square Back End Flange Mount 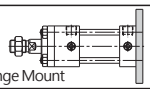
LA Side End Base Mount 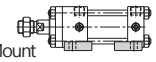	**FY** Front End Reinforced Flange Mount 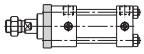
LB Front End Base Mount 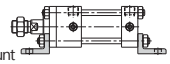	**FZ** Back End Reinforced Flange Mount 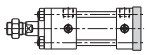
FA Front Flange 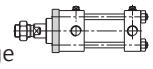	**CA** Single Clevis Bracket 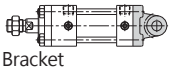
FB Rear Flange 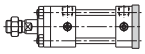	**CB** Double Clevis Bracket 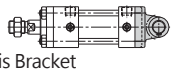
FC Square Front End Flange Mount 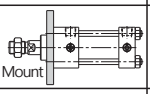	**TA** Front Trunnion Mount 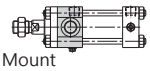
	TC Center Trunnion Mount 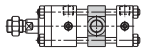

4. **Hydraulic Cylinder Bore Size**
   Standard: ø32、ø40、ø50、ø63、ø80、ø100

5. **Sensor Device** (ø32 Series without sensor)
   M: With Magnet / N: Without Magnet

6. **Stroke (ST)**

7. **Rod End Accessories**

I 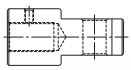	**Y** 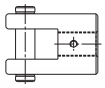

8. **Oil Port Positions** A、B、C、D

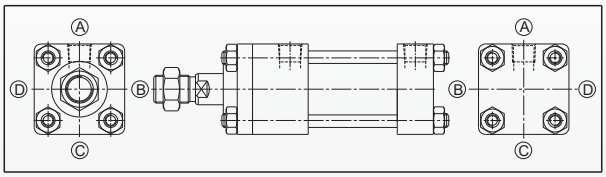

9. **Buffer Adjustment Valve Position** A、B、C、D

10. **Buffer Function Label**
    Unmarked: No buffer / PPV : Both Ends / FPPV : Front / RPPV : Rear

Internal Structure (Standard)

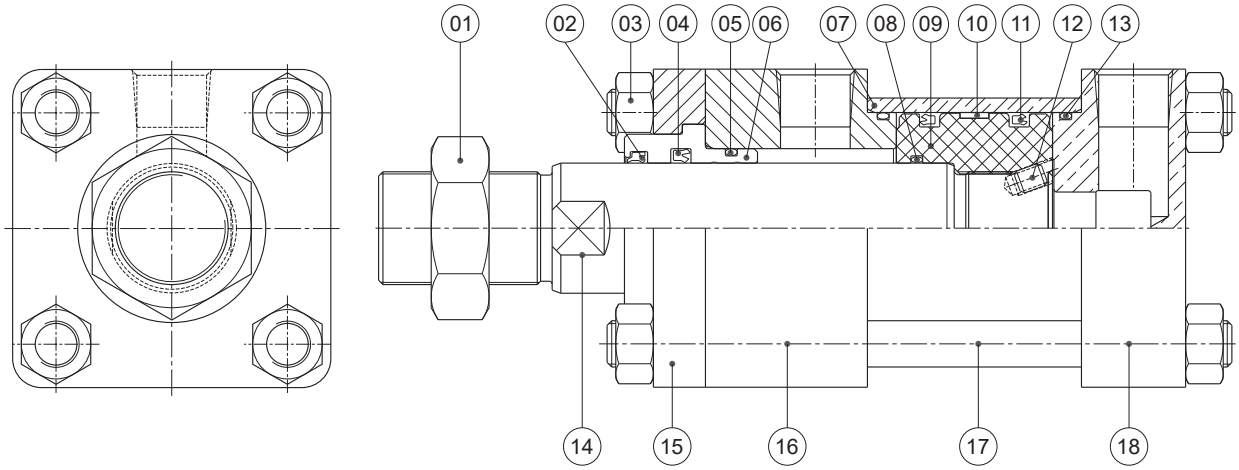

Components：

Item	Part Name	Material	Item	Part Name	Material
1	Hex Nut	SS400	10	Wearing Ring	Copper powder and wear resistant powder
2	Wiper Ring	PU	11	U-ring	PU
3	Hex Nut	S45C	12	Interior Hexagon Stop Bolts	SCM435
4	U-ring	PU	13	O-ring	NBR
5	O-ring	NBR	14	Piston Rod	S45C
6	Rod Bushing	BC6	15	Coated Mount plate	SS400
7	Cylinder Tube	ST52	16	Front Cap	SS400
8	O-ring	NBR	17	Tie Rod Bolts	SS400
9	Piston Body	SS400	18	Rear Cap	SS400

Applicable Conditions：

Category	15B(Non-inductive)	15B+M (Inductive)
Bore Size (mm)	ø 32, ø 40, ø 50, ø 63, ø 80, ø 100	
Minimum Operating Pressure	0.3MPa (3.06 kgf/cm^2)	
Maximum Operating Pressure	14MPa (142.8 kgf/cm^2)	
Proof Pressure	21MPa (214.2 kgf/cm^2)	
Operating Speed Range	8~400 mm/s	
Operating Speed Range	-10℃～+80℃	
Operating Oil	General mineral operating oil (ISO Vg32)	

15B Internal Structure (Buffer)

Internal Structure(Buffer)

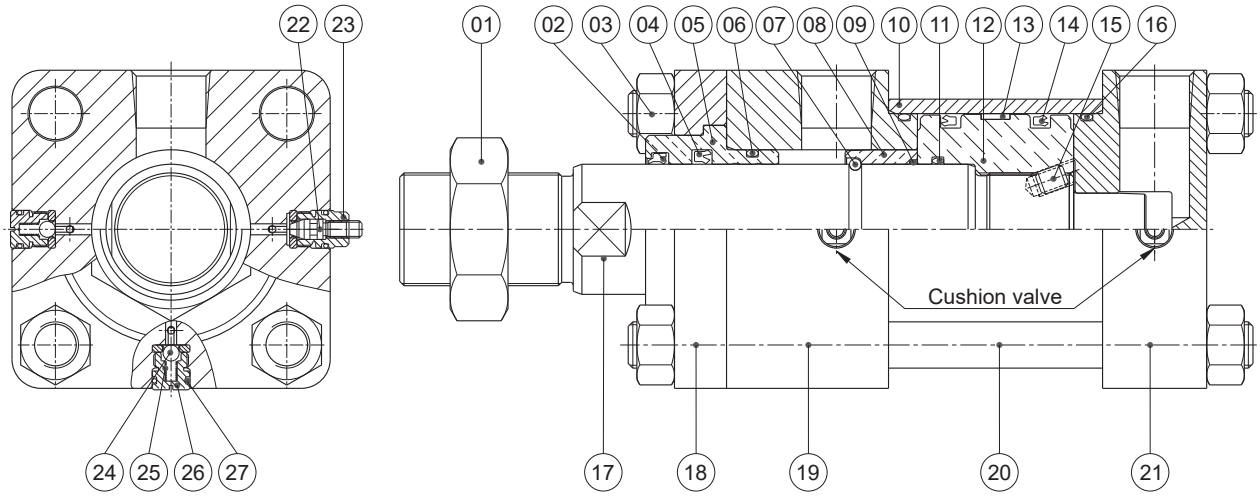

Components：

Item	Part Name	Material	Item	Part Name	Material
1	Hex Nut	SS400	15	Hexagonal Socket Mount Bolts	SCM435
2	Wiper Ring	PU	16	O-ring	NBR
3	Hex Nut	S45C	17	Rod Unit	S45C
4	U-ring	PU	18	Coated Mount Plate	SS400
5	Rod Bushing	BC6	19	Front Cap	SS400
6	O-ring	NBR	20	Tie Rod Bolts	SS400
7	Stop Ring	SWP	21	Rear Cap	SS400
8	Buffer Stop	FC25	22	Flow Control Adjustment Bolts	SS400
9	O-ring	NBR	23	Seal Flow Valve Control	S45C
10	Cylinder Tube	ST52	24	Steel Beads	SUJ2
11	O-ring	NBR	25	Spring	SWP
12	Piston Body	SS400	26	Reverse Stop Valve Block	S45C
13	Wearing Ring	Copper powder + wear resistant powder	27	O-ring	NBR
14	U-ring	PU			

Feature Description：

- Hydraulic Cylinder JIS B8354 specification.
- This series of hydraulic cylinders front and rear caps are made of carbon steel.
- Endpoints have adjustable sliding cushion devices and exhaust valves, (buffers optional).
- Sensor type seamless cylinder tube made of light stainless steel (SUS304).
- Cylinder tube without sensor is made of honed carbon steel.
- Piston rod made of carbon steel S45C, chrome plated and polished to mirror luminosity finish for rigidity, wear and corrosion resistant.
- Robust structure.

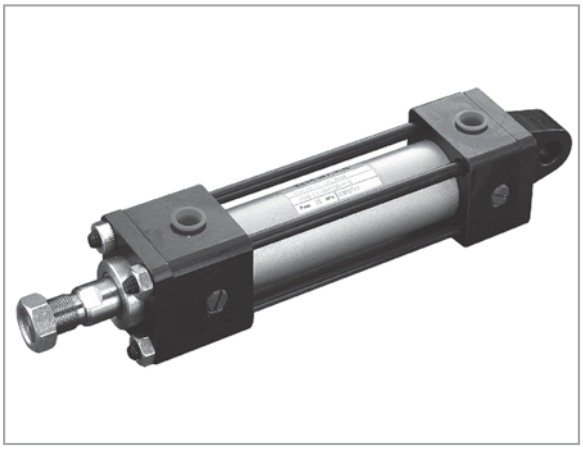

Standard(SD)

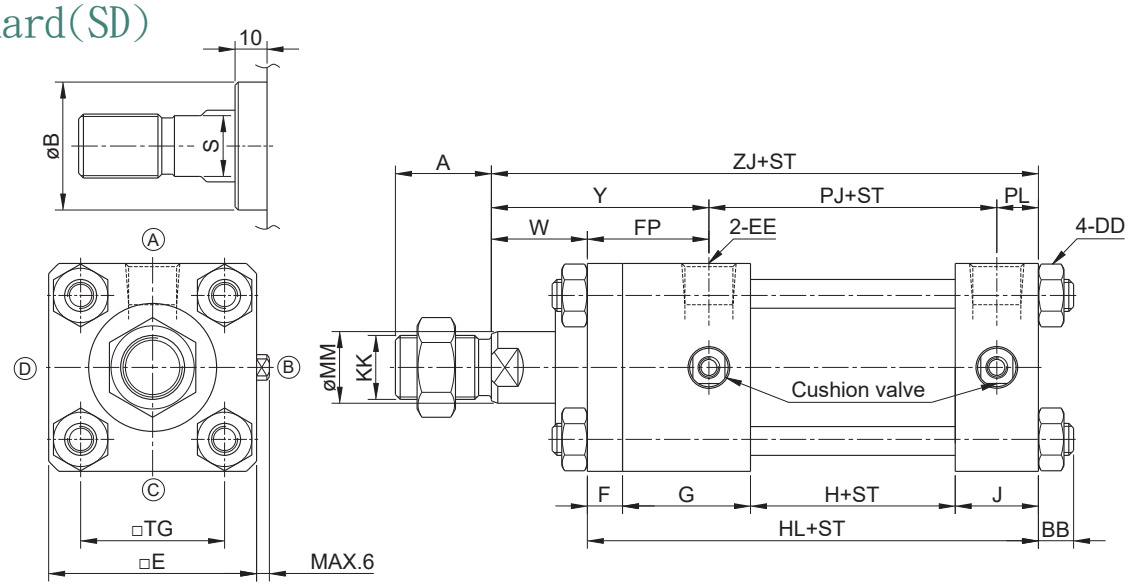

Double Rod

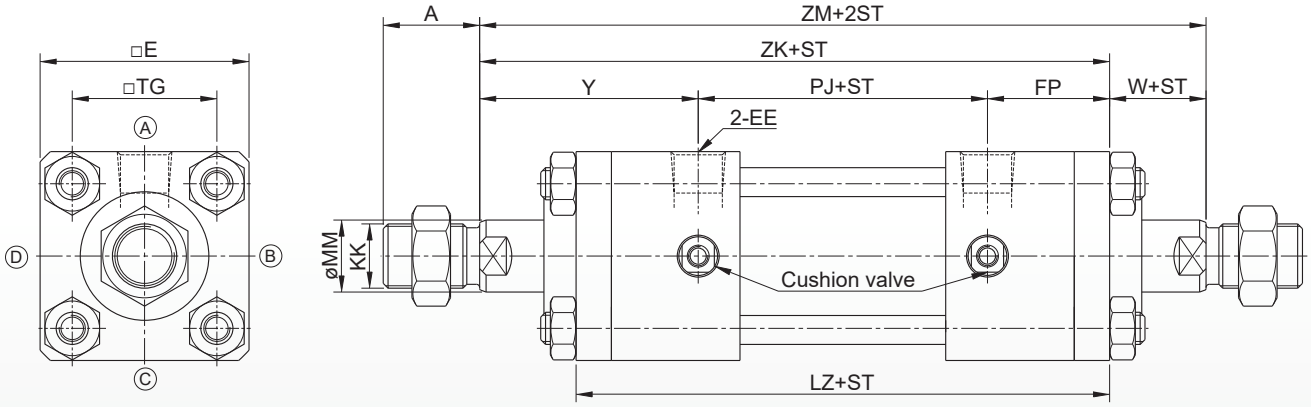

ST=Stroke Unit：mm

Label / Bore Size	A	øB	KK	øMM	S	BB	DD	E	EE	F	FP	G	H	HL	J	PJ	PL	TG	W	Y	ZJ	LZ	ZK	ZM
ø32	25	34	M16×1.5	18	14	11	M10×1.5	58	PT 3/8	11	38	40	64	141	26	90	13	38	30	68	171	166	196	226
ø40	30	40	M20×1.5	22.4	19	11	M10×1.5	65	PT 3/8	11	38	40	64	141	26	90	13	45	30	68	171	166	196	226
ø50	35	46	M24×1.5	28	24	11	M10×1.5	76	PT 1/2	13	42	44	68	155	30	98	15	52	30	72	185	182	212	242
ø63	45	55	M30×1.5	35.5	30	13	M12×1.25	90	PT 1/2	15	46	46	72	163	30	102	15	63	35	81	198	194	229	264
ø80	60	65	M39×1.5	45	41	16	M16×1.5	110	PT 3/4	18	56	56	74	184	36	110	18	80	35	91	219	222	257	292
ø100	75	80	M48×1.5	56	50	24	M18×1.5	135	PT 3/4	20	58	56	80	192	36	116	18	102	40	98	232	232	272	312

LA Type Side Foot Mount

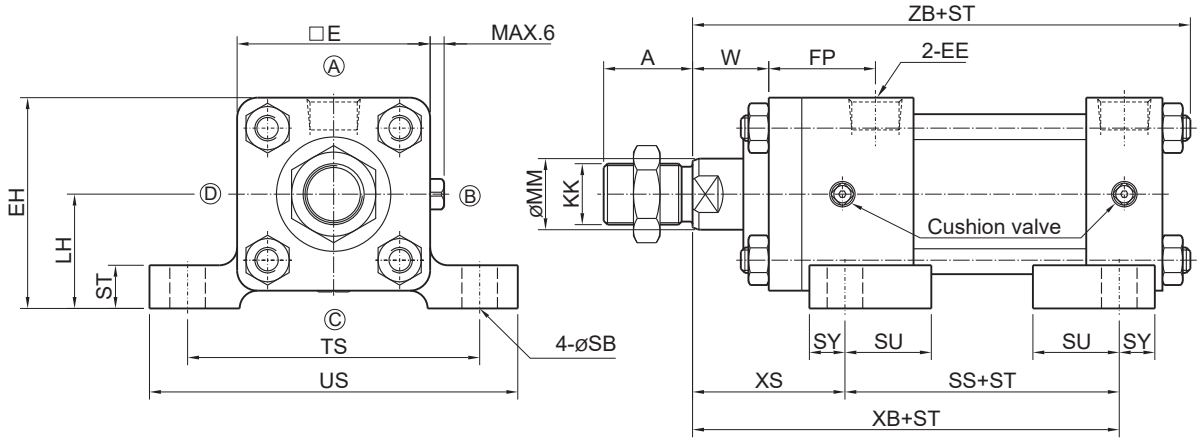

(Rod diameter B specification) ST=Stroke Unit : mm

Label / Bore Size	A	KK	øMM	E	EE	EH	FP	LH	SB	SS	ST	SU	SY	TS	US	W	XB	XS	ZB
ø32	25	M16×1.5	18	58	PT 3/8	64	38	35 ±0.15	11	98	12	31	13	88	109	30	155	57	182
ø40	30	M20×1.5	22.4	65	PT 3/8	70	38	37.5 ±0.15	11	98	14	31	13	95	118	30	155	57	182
ø50	35	M24×1.5	28	76	PT 1/2	83	42	45 ±0.15	14	108	17	34	14	115	145	30	168	60	196
ø63	45	M30×1.5	35.5	90	PT 1/2	95	46	50 ±0.15	18	106	19	32	18	132	165	35	177	71	211
ø80	60	M39×1.5	45	110	PT 3/4	115	56	60 ±0.25	18	124	25	42	18	155	190	35	198	74	235
ø100	75	M48×1.5	56	135	PT 3/4	138.5	58	71 ±0.25	22	122	27	38	22	190	230	40	207	85	250

※ Refer to Standard Type for other dimensions.

LB Type Side Foot Mount

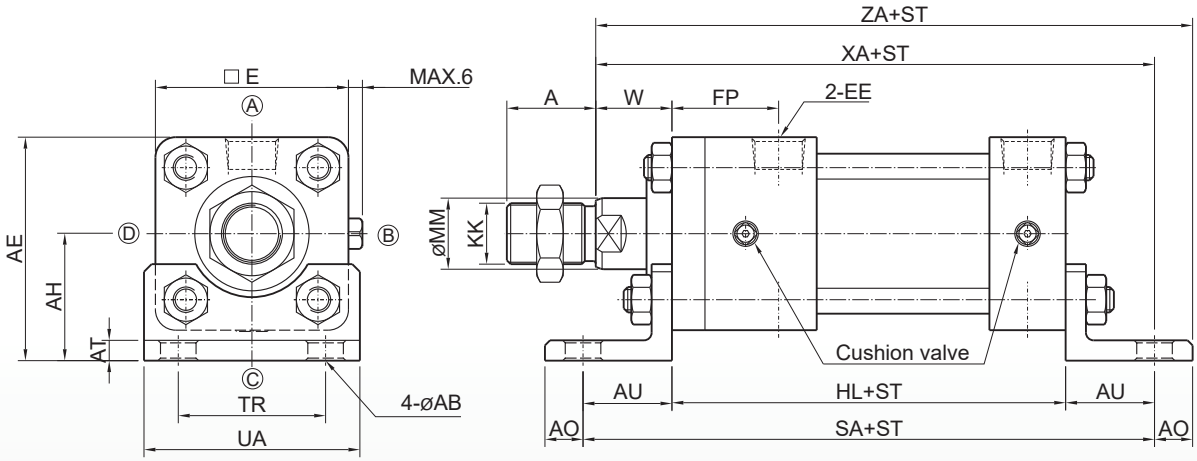

(Rod diameter B specification) ST=Stroke Unit : mm

Label / Bore Size	A	KK	øMM	AB	AE	AH	AD	AT	AU	E	EE	FP	HL	SA	TR	UA	W	XA	ZA
ø32	25	M16×1.5	18	11	69	40 ±0.15	13	8	32	58	PT 3/8	38	141	205	40	62	30	203	216
ø40	30	M20×1.5	22.4	11	75.5	43 ±0.15	13	8	32	65	PT 3/8	38	141	205	46	69	30	203	216
ø50	35	M24×1.5	28	14	88	50 ±0.15	15	8	35	76	PT 1/2	42	155	225	58	85	30	220	235
ø63	45	M30×1.5	35.5	18	105	60 ±0.15	18	8	42	90	PT 1/2	46	163	247	65	98	35	240	258
ø80	60	M39×1.5	45	18	127	72 ±0.25	20	12	50	110	PT 3/4	56	184	284	87	118	35	269	289
ø100	75	M48×1.5	56	22	152.5	85 ±0.25	23	12	55	135	PT 3/4	58	192	302	109	150	40	287	310

※ Refer to Standard Type for other dimensions.

FA Type Front Flange Mounting

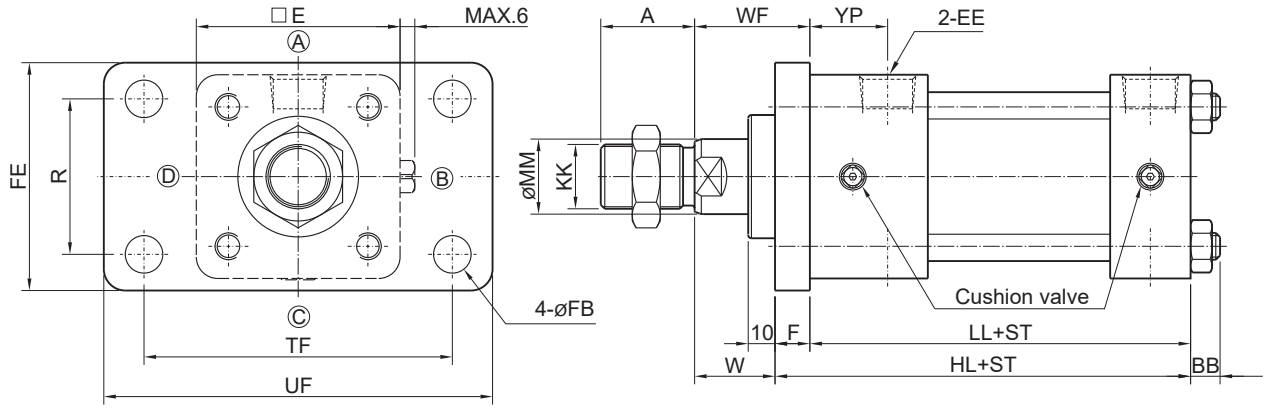

(Rod diameter B specification) ST=Stroke Unit : mm

Label / Bore Size	A	KK	øMM	BB	E	EE	F	FB	FE	HL	LL	R	TF	UF	W	WF	YP
ø32	25	M16×1.5	18	11	58	PT 3/8	11	11	62	141	130	40	88	109	30	41	27
ø40	30	M20×1.5	22.4	11	65	PT 3/8	11	11	69	141	130	46	95	118	30	41	27
ø50	35	M24×1.5	28	11	76	PT 1/2	13	14	85	155	142	58	115	145	30	43	29
ø63	45	M30×1.5	35.5	13	90	PT 1/2	15	18	98	163	148	65	132	165	35	50	31
ø80	60	M39×1.5	45	16	110	PT 3/4	18	18	118	184	166	87	155	190	35	53	38
ø100	75	M48×1.5	56	24	135	PT 3/4	20	22	150	192	172	109	190	230	40	60	38

※ Refer to Standard Type for other dimensions.

FB Type Type Rear Flange Mounting

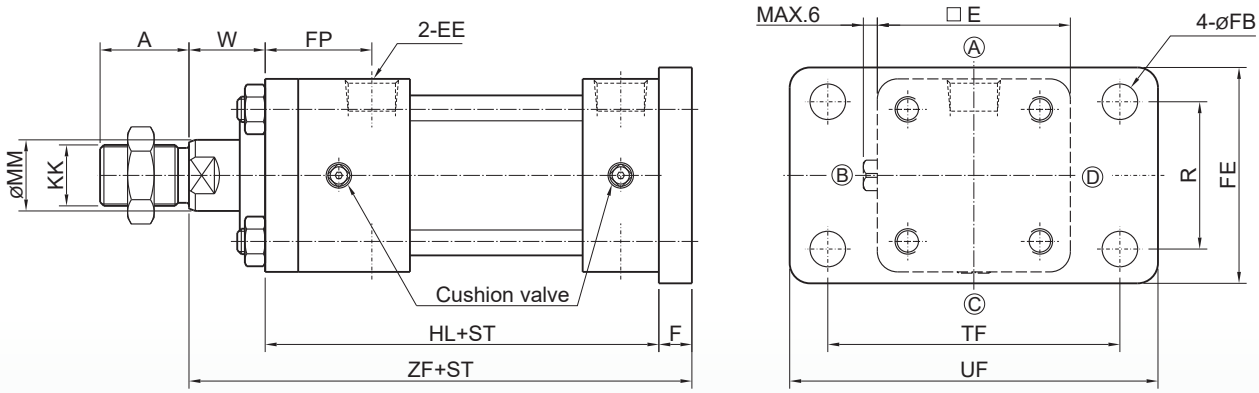

(Rod diameter B specification) ST=Stroke Unit : mm

Label / Bore Size	A	KK	øMM	E	EE	F	FB	FE	FP	HL	R	TF	UF	W	ZF
ø32	25	M16×1.5	18	58	PT 3/8	11	11	62	38	141	40	88	109	30	182
ø40	30	M20×1.5	22.4	65	PT 3/8	11	11	69	38	141	46	95	118	30	182
ø50	35	M24×1.5	28	76	PT 1/2	13	14	85	42	155	58	115	145	30	198
ø63	45	M30×1.5	35.5	90	PT 1/2	15	18	98	46	163	65	132	165	35	213
ø80	60	M39×1.5	45	110	PT 3/4	18	18	118	56	184	87	155	190	35	237
ø100	75	M48×1.5	56	135	PT 3/4	20	22	150	58	192	109	190	230	40	252

※ Refer to Standard Type for other dimensions.

FC Type Front Square Flange Type

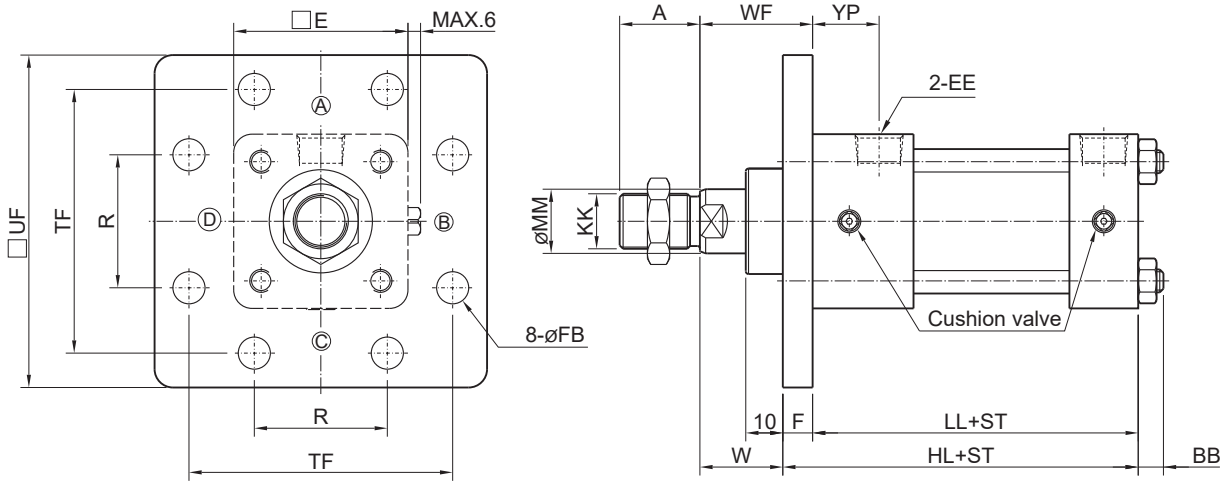

(Rod diameter B specification) ST=Stroke Unit : mm

Label / Bore Size	A	KK	øMM	BB	E	EE	F	FB	HL	LL	R	TF	UF	W	WF	YP
ø32	25	M16×1.5	18	11	58	PT 3/8	11	11	141	130	40	88	109	30	41	27
ø40	30	M20×1.5	22.4	11	65	PT 3/8	11	11	141	130	46	95	118	30	41	27
ø50	35	M24×1.5	28	11	76	PT 1/2	13	14	155	142	58	115	145	30	43	29
ø63	45	M30×1.5	35.5	13	90	PT 1/2	15	18	163	148	65	132	165	35	50	31
ø80	60	M39×1.5	45	16	110	PT 3/4	18	18	184	166	87	155	190	35	53	38
ø100	75	M48×1.5	56	24	135	PT 3/4	20	22	192	172	109	190	230	40	60	38

※ Refer to Standard Type for other dimensions.

FD Type Square Rear Flange Type

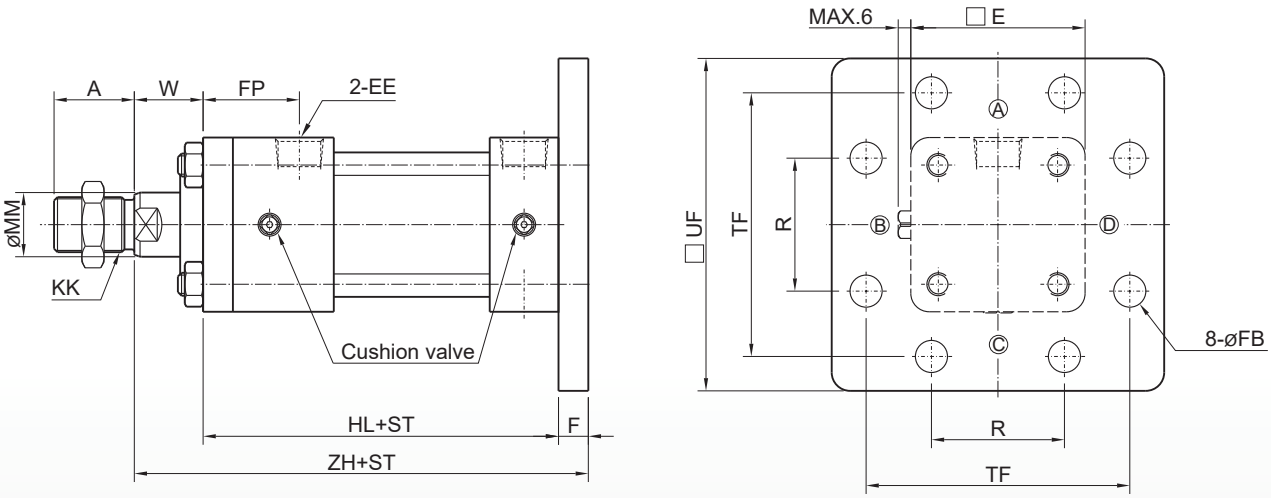

(Rod diameter B specification) ST=Stroke Unit : mm

Label / Bore Size	A	KK	øMM	E	EE	F	FB	FP	HL	R	TF	UF	W	ZH
ø32	25	M16×1.5	18	58	PT 3/8	11	11	38	141	40	88	109	30	182
ø40	30	M20×1.5	22.4	65	PT 3/8	11	11	38	141	46	95	118	30	182
ø50	35	M24×1.5	28	76	PT 1/2	13	14	42	155	58	115	145	30	198
ø63	45	M30×1.5	35.5	90	PT 1/2	15	18	46	163	65	132	165	35	213
ø80	60	M39×1.5	45	110	PT 3/4	18	18	56	184	87	155	190	35	237
ø100	75	M48×1.5	56	135	PT 3/4	20	22	58	192	109	190	230	40	252

※ Refer to Standard Type for other dimensions.

FY Type Reinforced Front Flange Type

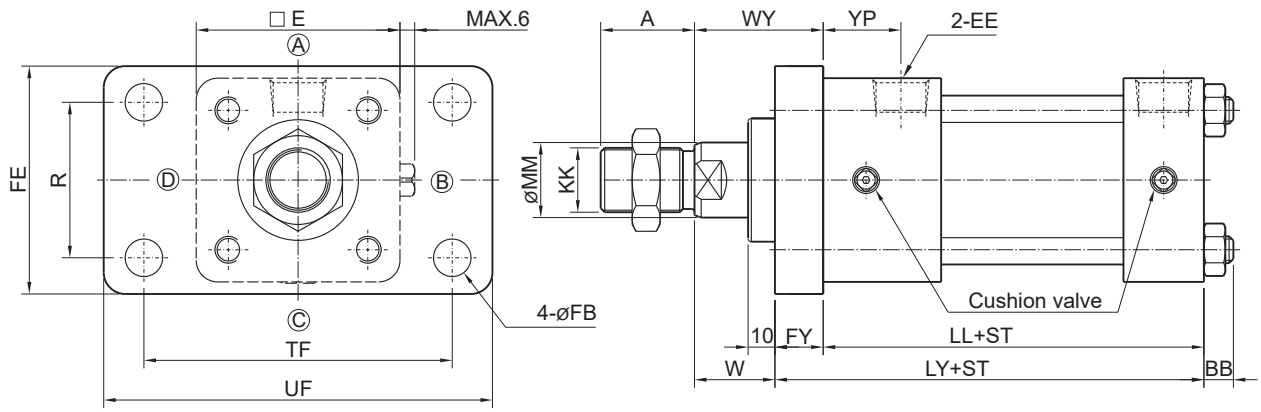

(Rod diameter B specification) ST=Stroke Unit : mm

Label / Bore Size	A	KK	øMM	BB	E	EE	FY	FB	FE	LY	LL	R	TF	UF	W	WY	YP
ø32	25	M16×1.5	18	11	58	PT 3/8	13	11	62	143	130	40	88	109	30	43	27
ø40	30	M20×1.5	22.4	11	65	PT 3/8	13	11	69	143	130	46	95	118	30	43	27
ø50	35	M24×1.5	28	11	76	PT 1/2	18	14	85	160	142	58	115	145	30	48	29
ø63	45	M30×1.5	35.5	13	90	PT 1/2	20	18	98	168	148	65	132	165	35	55	31
ø80	60	M39×1.5	45	16	110	PT 3/4	24	18	118	190	166	87	155	190	35	59	38
ø100	75	M48×1.5	56	24	135	PT 3/4	28	22	150	200	172	109	190	230	40	68	38

※ Refer to Standard Type for other dimensions.

FZ Type Reinforced Rear Flange

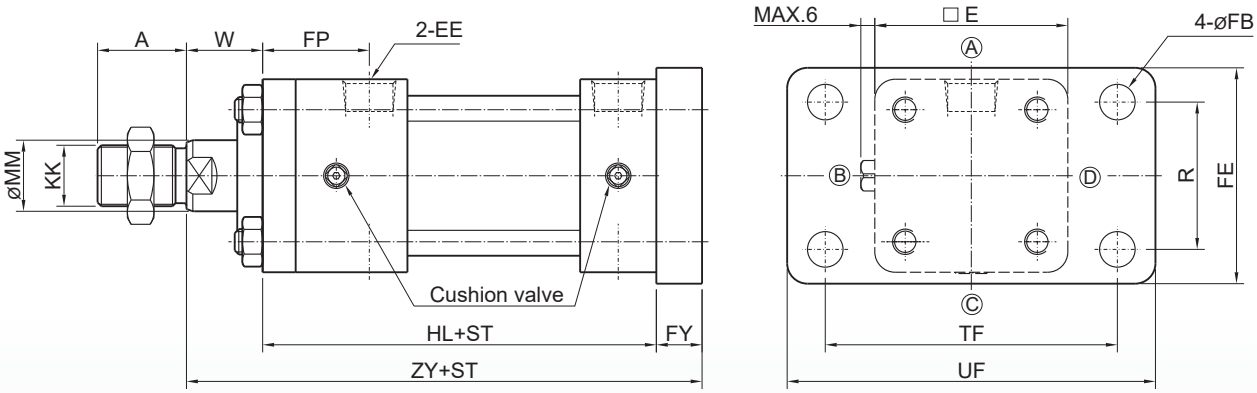

(Rod diameter B specification) ST=Stroke Unit : mm

Label / Bore Size	A	KK	øMM	E	EE	FY	FB	FE	FP	HL	R	TF	UF	W	ZY
ø32	25	M16×1.5	18	58	PT 3/8	13	11	62	38	141	40	88	109	30	184
ø40	30	M20×1.5	22.4	65	PT 3/8	13	11	69	38	141	46	95	118	30	184
ø50	35	M24×1.5	28	76	PT 1/2	18	14	85	42	155	58	115	145	30	203
ø63	45	M30×1.5	35.5	90	PT 1/2	20	18	98	46	163	65	132	165	35	218
ø80	60	M39×1.5	45	110	PT 3/4	24	18	118	56	184	87	155	190	35	243
ø100	75	M48×1.5	56	135	PT 3/4	28	22	150	58	192	109	190	230	40	260

※ Refer to Standard Type for other dimensions.

CA Type Single Clevis Bracket

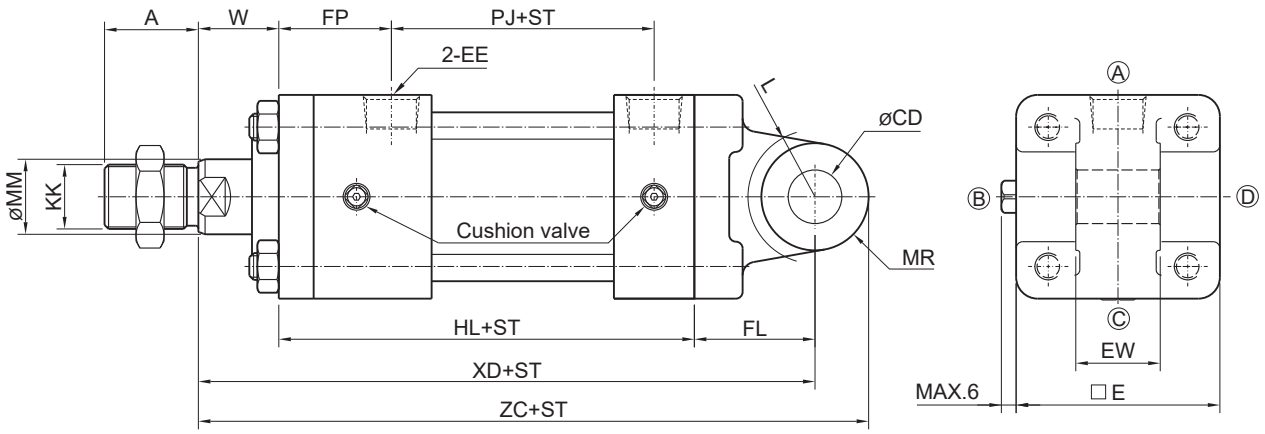

(Rod diameter B specification) ST=Stroke Unit : mm

Label / Bore Size	A	KK	øMM	CD	E	EE	EW	FL	FP	HL	L	MR	PJ	W	XD	ZC
ø32	25	M16×1.5	18	16 H9	58	PT 3/8	25 $^{-0.1}_{-0.4}$	38	38	141	R 20	R 16	90	30	209	225
ø40	30	M20×1.5	22.4	16 H9	65	PT 3/8	25 $^{-0.1}_{-0.4}$	38	38	141	R 20	R 16	90	30	209	225
ø50	35	M24×1.5	28	20 H9	76	PT 1/2	31.5 $^{-0.1}_{-0.4}$	45	42	155	R 25	R 20	98	30	230	250
ø63	45	M30×1.5	35.5	31.5 H9	90	PT 1/2	40 $^{-0.1}_{-0.4}$	63	46	163	R 46	R 31.5	102	35	261	292.5
ø80	60	M39×1.5	45	31.5 H9	110	PT 3/4	40 $^{-0.1}_{-0.4}$	72	56	184	R 52	R 31.5	110	35	291	322.5
ø100	75	M48×1.5	56	40 H9	135	PT 3/4	50 $^{-0.1}_{-0.4}$	84	58	192	R 62	R 40	116	40	316	356

※ Refer to Standard Type for other dimensions.

CB Type Double Clevis Bracket Type

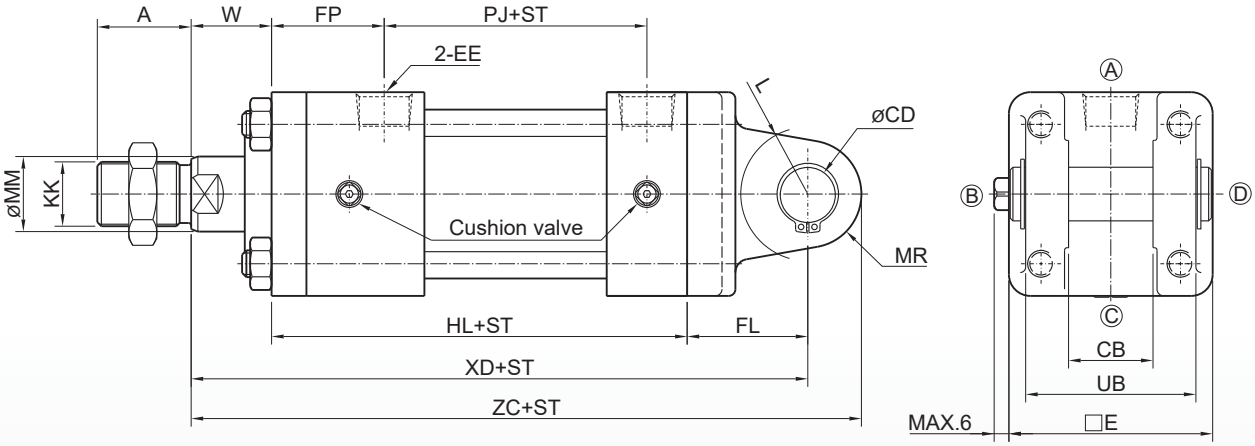

(Rod diameter B specification) ST=Stroke Unit : mm

Label / Bore Size	A	KK	øMM	CB	CD	E	EE	FL	FP	HL	L	MR	PJ	UB	W	XD	ZC
ø32	25	M16×1.5	18	25 $^{+0.4}_{+0.1}$	16 H9/f8	58	PT 3/8	38	38	141	R 20	R 16	90	50	30	209	225
ø40	30	M20×1.5	22.4	25 $^{+0.4}_{+0.1}$	16 H9/f8	65	PT 3/8	38	38	141	R 20	R 16	90	50	30	209	225
ø50	35	M24×1.5	28	31.5 $^{+0.4}_{+0.1}$	20 H9/f8	76	PT 1/2	45	42	155	R 25	R 20	98	63.5	30	230	250
ø63	45	M30×1.5	35.5	40 $^{+0.4}_{+0.1}$	31.5 H9/f8	90	PT 1/2	63	46	163	R 40	R 31.5	102	80	35	261	292.5
ø80	60	M39×1.5	45	40 $^{+0.4}_{+0.1}$	31.5 H9/f8	110	PT 3/4	72	56	184	R 52	R 31.5	110	80	35	291	322.5
ø100	75	M48×1.5	56	50 $^{+0.4}_{+0.1}$	40 H9/f8	135	PT 3/4	84	58	192	R 62	R 40	116	100	40	316	356

※ Refer to Standard Type for other dimensions.

TA Type Front Trunnion Mount

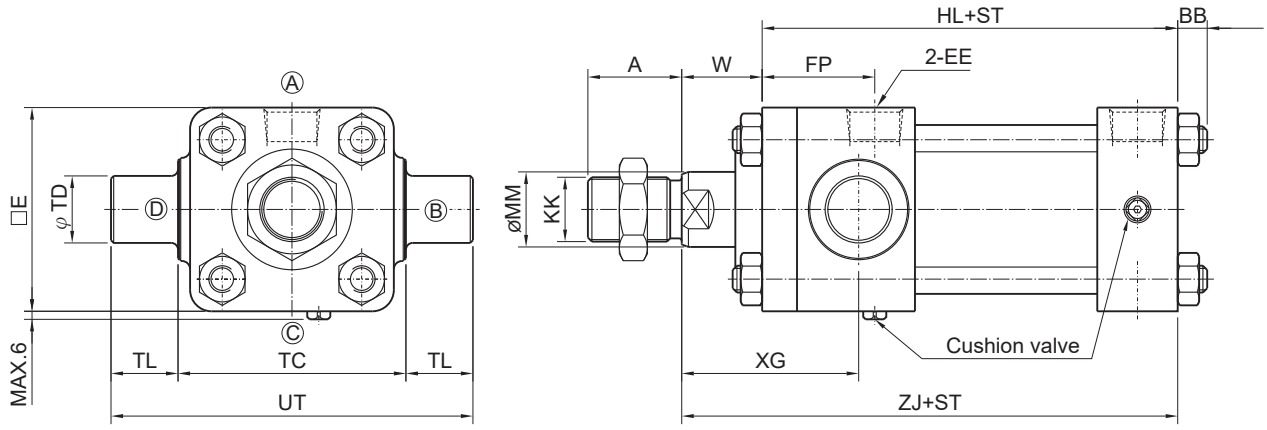

(Rod diameter B specification) ST=Stroke Unit : mm

Label / Bore Size	A	KK	øMM	BB	E	EE	FP	HL	ZJ	TC	TL	UT	TD	W	XG
ø32	25	M16×1.5	18	11	58	PT 3/8	38	141	171	58 $^{0}_{-0.3}$	20	98	20 e9	30	62
ø40	30	M20×1.5	22.4	11	65	PT 3/8	38	141	171	69 $^{0}_{-0.3}$	20	109	20 e9	30	62
ø50	35	M24×1.5	28	11	76	PT 1/2	42	155	185	85 $^{0}_{-0.35}$	25	135	25 e9	30	66
ø63	45	M30×1.5	35.5	13	90	PT 1/2	46	163	198	98 $^{0}_{-0.35}$	31.5	161	31.5 e9	35	74
ø80	60	M39×1.5	45	16	110	PT 3/4	56	184	219	118 $^{0}_{-0.35}$	31.5	181	31.5 e9	35	82
ø100	75	M48×1.5	56	24	135	PT 3/4	58	192	232	145 $^{0}_{-0.4}$	40	225	40 e9	40	89

※ Refer to Standard Type for other dimensions.
※ Position of TA Type buffer and exhaust valve are on side Ⓒ.

TC Type Center Trunnion Mount

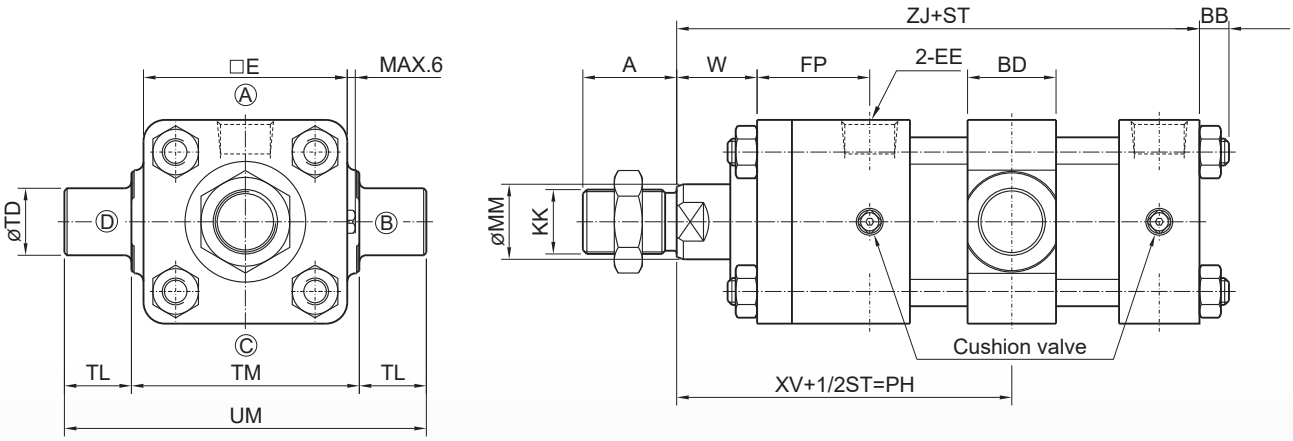

(Rod diameter B specification) ST=Stroke Unit : mm

Label / Bore Size	A	KK	øMM	BB	BD	E	EE	FP	Min.PH	TD	TL	TM	UM	W	XV	ZJ
ø32	25	M16×1.5	18	11	28	58	PT 3/8	38	95	20 e9	20	58 $^{0}_{-0.3}$	98	30	113	171
ø40	30	M20×1.5	22.4	11	28	65	PT 3/8	38	95	20 e9	20	69 $^{0}_{-0.3}$	109	30	113	171
ø50	35	M24×1.5	28	11	33	76	PT 1/2	42	103.5	25 e9	25	85 $^{0}_{-0.35}$	135	30	121	185
ø63	45	M30×1.5	35.5	13	43	90	PT 1/2	46	117.5	31.5 e9	31.5	98 $^{0}_{-0.35}$	161	35	132	198
ø80	60	M39×1.5	45	16	43	110	PT 3/4	56	130.5	31.5 e9	31.5	118 $^{0}_{-0.35}$	181	35	146	219
ø100	75	M48×1.5	56	24	53	135	PT 3/4	58	142.5	40 e9	40	145 $^{0}_{-0.4}$	225	40	156	232

※ Refer to Standard Type for other dimensions.
※ When PH size changes, be attentive to the smallest PH size.

15B Rod End Accessories

Hex Nut

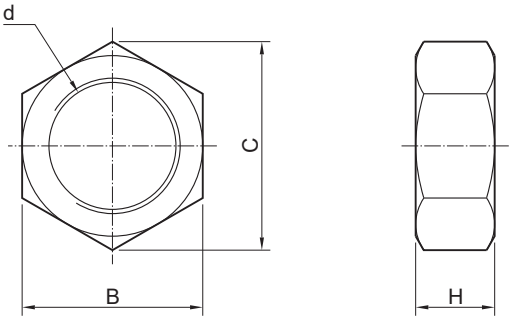

Unit：mm

Label / Bore Size	Class B			
	D	B	C	H
ø32	M16×1.5	22	25.4	10
ø40	M20×1.5	27	31.2	12
ø50	M24×1.5	32	37	14
ø63	M30×1.5	41	47.3	17
ø80	M39×1.5	55	63.5	20
ø100	M48×1.5	70	80.8	26

※ Class specification piston rod (under development)

IJoint

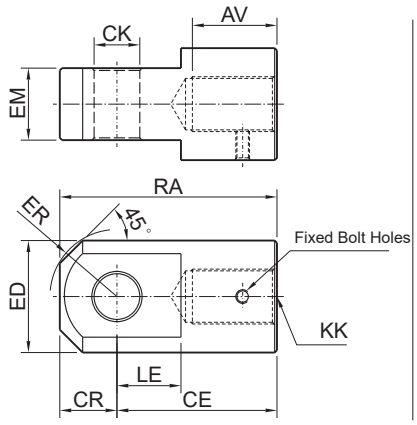

YJoint (With Pin)

ø32~80

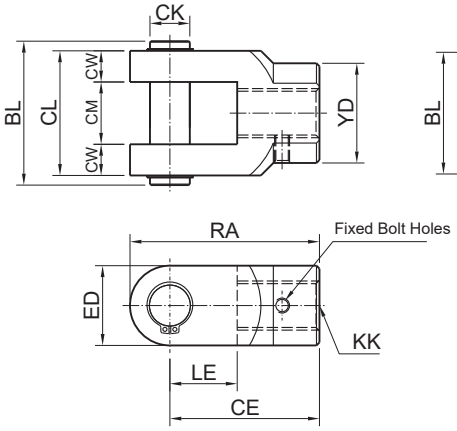

ø100

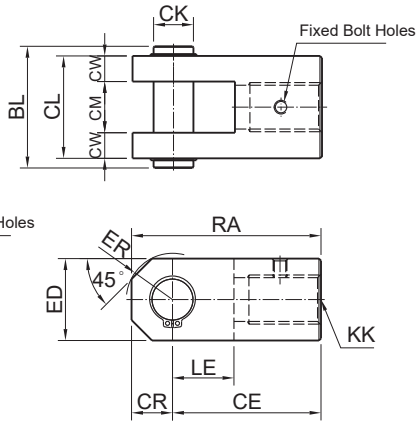

Unit：mm

Label / Bore Size	AV	BL	CE	CK		CL	CM	CR		CW	ED		EM	ER		KK	LE		RA		YD
				I	Y			I	Y		I	Y		I	Y		I	Y	I	Y	
ø32	27	62	60	16 H10	16 H9/f8	50	25 $^{+0.1}_{+0.4}$	20	-	12.5	39	32	25 $^{-0.1}_{-0.4}$	R23	R16	M16×1.5	23	27	80	76	-
ø40	32	62	60	16 H10	16 H9/f8	50	25 $^{+0.1}_{+0.4}$	20	-	12.5	39	32	25 $^{-0.1}_{-0.4}$	R23	R16	M20×1.5	23	27	80	76	50
ø50	37	75	70	20 H10	20 H9/f8	63.5	31.5 $^{+0.1}_{+0.4}$	25	-	16	49	41	31.5 $^{-0.1}_{-0.4}$	R29	R20.5	M24×1.5	28	32	95	90	63.5
ø63	47	93	115	31.5 H10	31.5 H9/f8	80	40 $^{+0.1}_{+0.4}$	35	-	20	62	60	40 $^{-0.1}_{-0.4}$	R39	R30	M30×1.5	43	50	150	145	70
ø80	62	93	115	31.5 H10	31.5 H9/f8	80	40 $^{+0.1}_{+0.4}$	35	-	20	62	60	40 $^{-0.1}_{-0.4}$	R39	R30	M39×1.5	43	50	150	145	70
ø100	77	115	145	40 H10	40 H9/f8	100	50 $^{+0.1}_{+0.4}$	40	40	25	79	80	50 $^{-0.1}_{-0.4}$	R45	R45	M48×1.5	55	60	185	185	-