1 Pnematic Drives

Standard Cylinder Series

◎Japanese Round Cylinder / DS

(Compatible with SMC CM2 Series installation sizes)

HINAKA

DS Ordering Guidelines

Ordering Guidelines

DS A - 20 M 100 PPV - LB - Y - G48R 2

1 Function

DS	Double Acting (Retracting Type)
DSR	Forward Motion
DSH	Single Acting Backward Motion

2 Pneumatic Cylinder Type

DSA	Standard Type A
DSC	Standard Type C
DSS	Standard Type S

3 Bore Size

4 Sensor Device

M : With Magnet / **N** :Without Magnet

5 Stroke (ST)

6 Adjustable End Cushions

PPV: Double End
FPPV: Front
RPPV: Rear
Unmarked : Without Cushion on Either End

7 Mounting Accessories

FA	TC
CB	LB

8 Rod End Accessories

Y

9 Sensors Type

(Refer to Section 8 Accessories: Sensor Devices)

10 Number of Sensors

Ordering Guidelines

DS D - 40 M 100 PPV - A - G48R 2

1 **Function**

D	Double Acting (Retracting Type)

2 **Pneumatic Cylinder Type**

DSD D Buffer Type	**DSDE** DE Adjustable Buffer Type

3 **Bore Size**

4 **Sensor Device**

M: With Magnet / **N**: Without Magnet

5 **Stroke (ST)**

6 **Adjustable End Cushions**

PPV: Double End
FPPV: Front
RPPV: Rear
Unmarked : Without Cushion on Either End

7 **Adjustable Space**

A: 0~25mm / **B**: 0~50mm

8 **Sensors Type**

(Refer to Section 8 Accessories: Sensor Devices)

9 **Number of Sensors**

DS Internal Structure

Internal Structure：

DSA

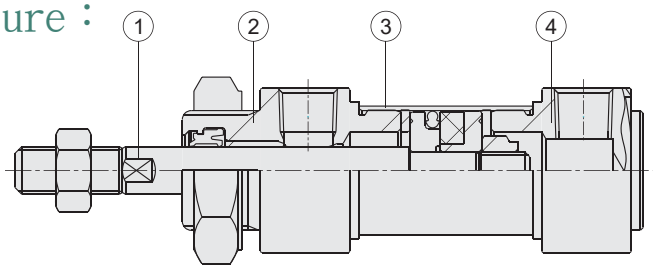

DSC

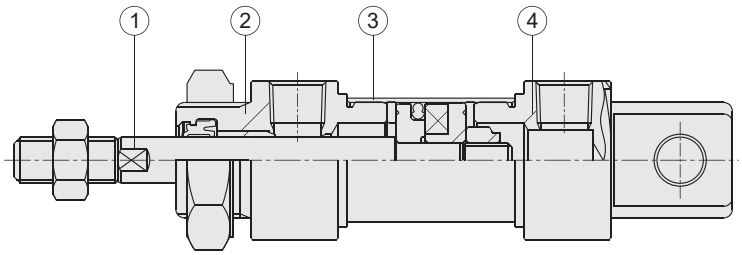

DSS

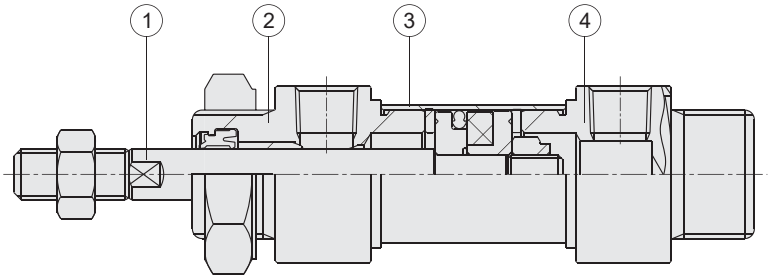

DSDE

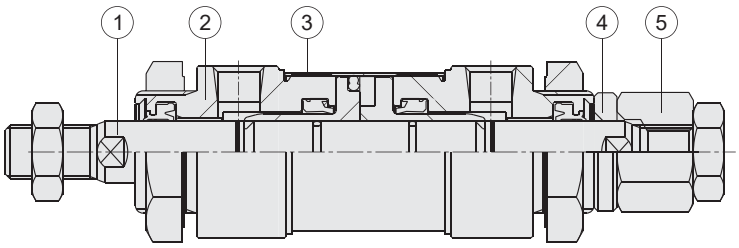

Components：

Item	Part Name	Material	Item	Part Name	Material
1	Piston Rod	Carbon Steel S45C	4	Rear Cap	Aluminum Alloy AA6063
2	Front Cap	Aluminum Alloy AA6063	5	Adjustable Nut	Structural Steel A6061
3	Cylinder Tube	Stainless Steel SUS304		Seal	Nitrile Rubber NBR

Applicable Conditions：

Bore Size ø	Function	Working Fluid	Temperature Range	Operating Speed Range	Operating Oil	Proof Pressure	Maximum Operating Pressure	Minimum Operating Pressure
20 25 32 40	Double Acting	Filtered Compressed Air	-10°C~+60°C	50~1000mm/s	Not Necessary	1MPa (10.2kgf/cm²)	0.1~0.8MPa (1.02~8.16kgf/cm²)	0~25mm

Feature Description：

- Riveted piston rod and body for a tight fit, high concentricity, low friction and eliminates dead corners.
- Magnet coil installation available for sensor and adjustable end cushion.
- djustable forward stroke for precise positioning.

DS (Standard/Cushion Type A)

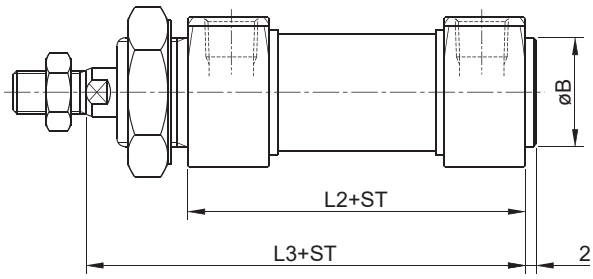

DS (Standard/Cushion Type S)

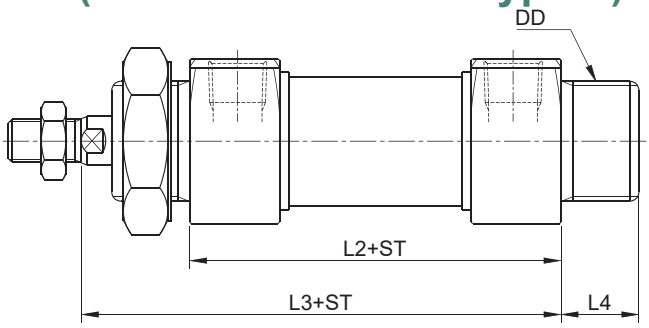

DS (Standard/Cushion Type C)

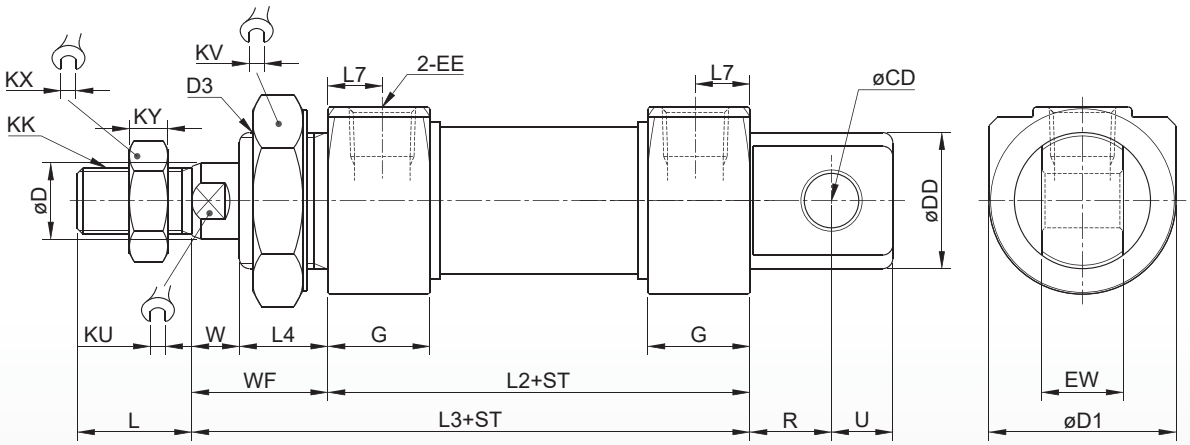

ST=Stroke Unit：mm

Label / Bore Size	L	D	KK	KX	KU	D3	KV	L4	G Standard Type	G Cushion Type	EE	DD A/C Type	DD S Type	L3	L2	KY	W	WF	L7	CD	U	R	EW	D1
ø20	18	8	M8×1.25	12	7	M20×1.5	27	13	15	17	PT 1/8	ø20	M20×1.5	85	62	6	10	23	8	8	12	9	12	27.5
ø25	22	10	M10×1.25	17	9	M26×1.5	32	13	15	17	PT 1/8	ø26	M26×1.5	85	62	6	10	23	8	8	12	9	12	30
ø32	22	12	M10×1.25	17	10	M26×1.5	32	13	15	17	PT 1/8	ø26	M26×1.5	87	64	6	10	23	8	10	15	12	20	37
ø40	24	16	M14×1.5	22	14	M32×2.0	41	16	21.5		PT 1/4	ø32	M32×2.0	114	88	8	10	26	11	10	15	12	20	45

DSD/DE

Feature Description：

Model :DSD

Function :

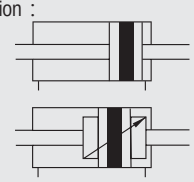

Model : DSDE

Function :

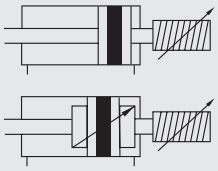

Limiting Conditions : Cushions for bores ø20 - ø40

DSD (Dual Rod Type)

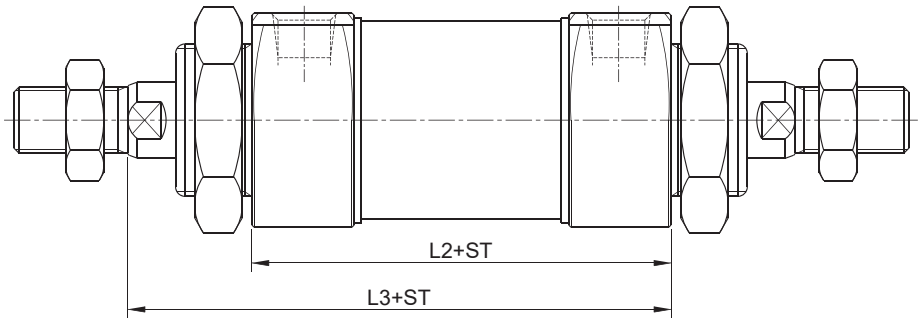

DSDE (Adjustable Dual Rod Type)

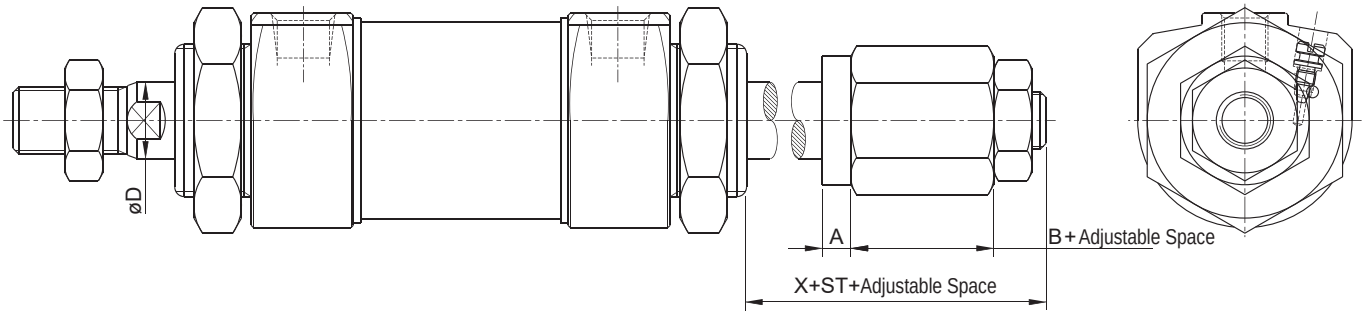

ST=Stroke Unit : mm

Label / Bore Size	D	A	B	X	Adjustable Space
ø20	8	5	14	24	25 / 50
ø25	10	5	16	28	
ø32	12	5	16	30	
ø40	16	6	21	35	

※ Refer to Standard Type for other dimensions.

TC Type - Center Trunnion

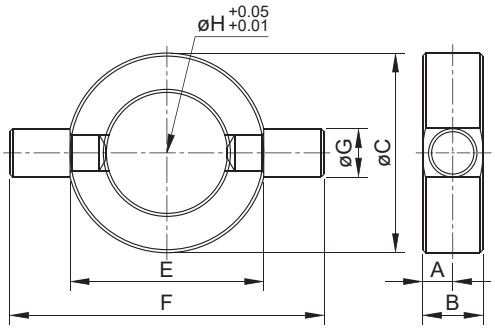

Unit : mm

Label / Bore Size	A	B	C	E	F	G	øH +0.05 0.01
ø20	5	10	33	32	52	8	20
ø25	5	10	41	40	60	9	26
ø32	5	10	41	40	60	9	26
ø40	5.5	11	54	53	77	10	32

LB Type - Foot Bracket

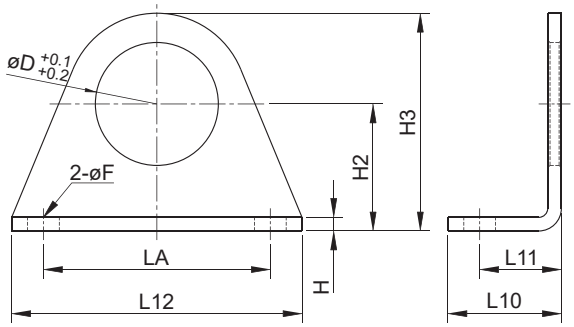

Unit : mm

Label / Bore Size	øF	H	L10	L11	L12	LA	H2	H3	øD +0.1 +0.2
ø20	7	3	28	20	55	40	25	40	20
ø25	7	3	28	20	55	40	28	47	26
ø32	7	3	28	20	55	40	28	47	26
ø40	7	3	30	23	75	55	30	54	32

CB Type - Double Clevis Bracket

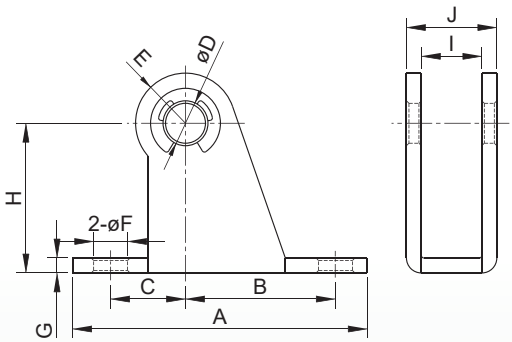

Unit : mm

Label / Bore Size	A	B	C	øD	E	øF	G	H	I	J
ø20	59	30	15	8	R10	6.8	3	30	12.1	18.1
ø25	59	30	15	8	R10	6.8	3	30	12.1	18.1
ø32	75	40	15	10	R13	9	4	40	20.1	28.1
ø40	75	40	15	10	R13	9	4	40	20.1	28.1

FA Type

ø20~ø32

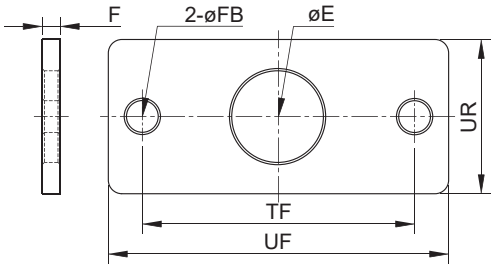

ø40

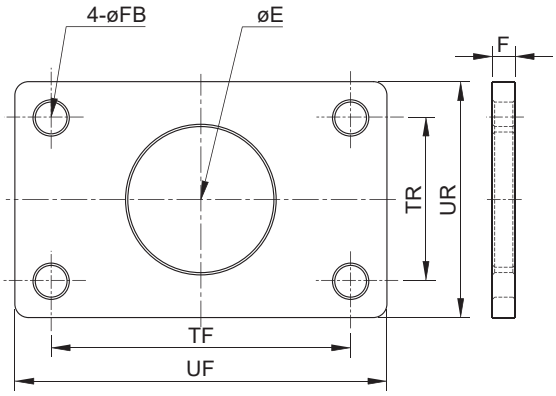

Unit : mm

Label / Bore Size	TF	UF	UR	FB	E	F	TR
ø20	60	75	34	7	20.2	4	-
ø25	60	75	40	7	26.2	4	-
ø32	60	75	40	7	26.2	4	-
ø40	66	82	52	7	32.2	5	36

Y Joint

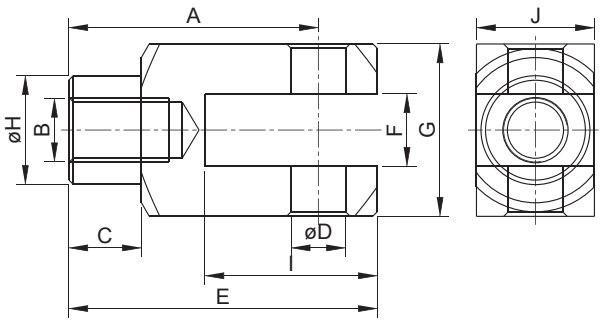

Unit : mm

Label / Bore Size	A	B	C	D	E	F	G	H	I	J
ø20	36	M8×1.25	12	9	46	9	18	17	24	18
ø25	38	M10×1.25	12	9	48	9	18	17	24	18
ø32	38	M10×1.25	12	9	48	9	18	17	24	18
ø40	55	M14×1.5	16	12	68	16	38	24	38	26