1 Pnematic Drives

Multistage Cylinder Series

Patent No.: M317311 / ZL200720002397.3

◎Multistage Pneumatic Cylinder/ DJ2T

HINAKA

DJ2T Ordering Guidelines

Ordering Guidelines

DJ2T - 100 M 15 F 3

1. Multistage Pneumatic Cylinder
2. Pneumatic Cylinder Bore Diameter
3. Sensor Device
   M: With Magnet / **N**: Without Magnet
4. Stroke (ST)
5. Rod Structure
   F: Female Thread / **E:** Male Thread / **H:** Interior Port
6. Section No.
   3: Section 3 / **Unmarked:** Standard

Internal Structure：

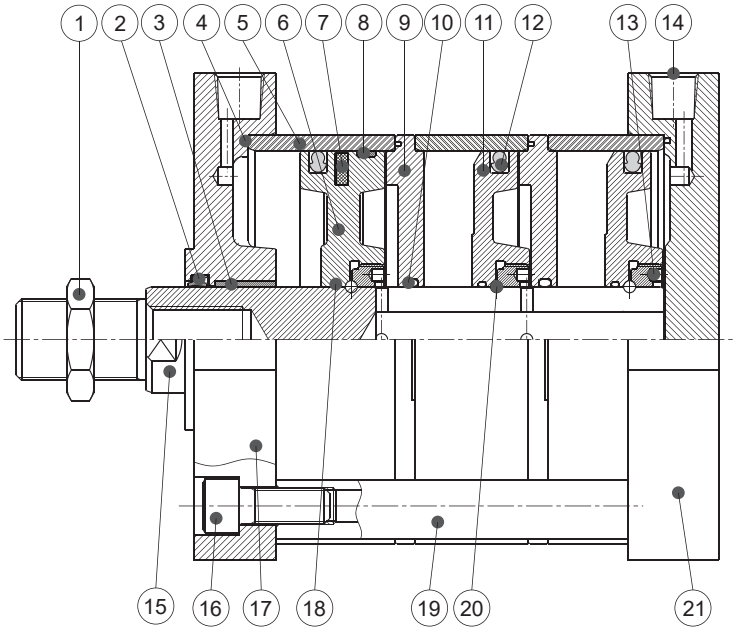

Components：

Item	Part Name	Material	Item	Part Name	Material
1	Hexagon nut	Iron	12	Eight loop ring	NBR
2	Dust removing O-Ring	NBR	13	Fixed piston ring	S30C
3	Plastic bearing	Plastic	14	Piston head	PU
4	Cylinder wall O-Ring	NBR	15	Piston rod	S45C
5	Front cylinder tube	A6063	16	Flat head hexagon screw	SCM435
6	Front piston body	A6061	17	Front cap	A6061
7	Magnetic ring	Rubber	18	O-Ring	NBR
8	Wear resistant O-Ring	Rubber	19	Extruded aluminum rod	A6061
9	Middle cap	A6061	20	Stop ring	SWP
10	O-Ring	NBR	21	Rear cap	A6061
11	Rear piston body	A6061			

Applicable Conditions：

Bore Size	Function	Working Fluid	Temperature Range	Operating Speed Range	Operating Oil	Proof Pressure	Operating Pressure Range
80,100,125,160	Single/ Double Acting	Filtered Compressed Air	-10°C~+60°C	50~1000mm/s	Not Necessary	1.471MPa (15kgf/cm²)	0.098~0.97MPa (1.0~9.9kgf/cm²)

DJ2T ø80 / ø100

Feature Description：

- The Multi Stage Pneumatic Cylinder has pistons of the same diameter linked in series to multiply output force on the same side, achieving desired output without enlarging cylinder diameter; developed of this kind are ø125 and ø160 for multi section pistons.
  Piston rod is an integrated body and cylinder is not in unlinked sections, (patent certified).
- Lower friction than the commonly known multi section linked rod cylinder.
- High speed and a long service life.

DJ2T (Interior Thread Type-F)

ø80, ø100

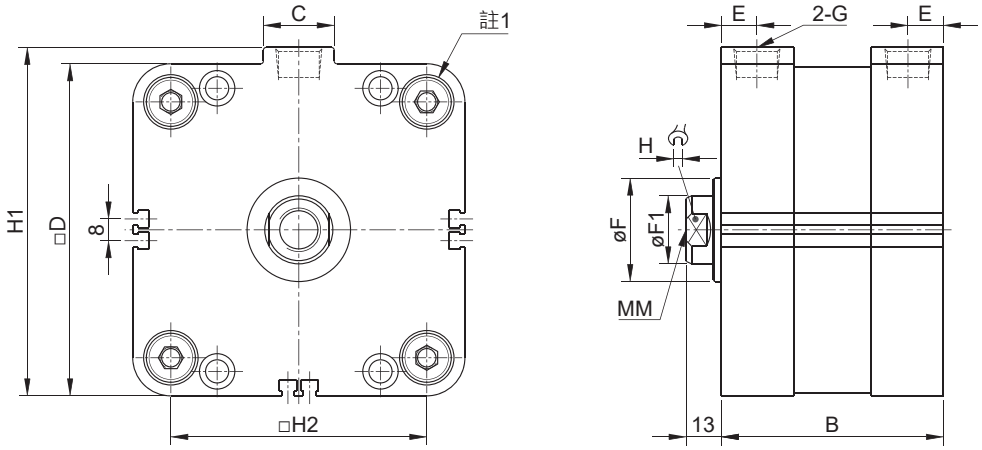

※Note1: Fixed hole size

DJ2T (Exterior Thread Type-E / Interior Port Type-H)

ø80, ø100

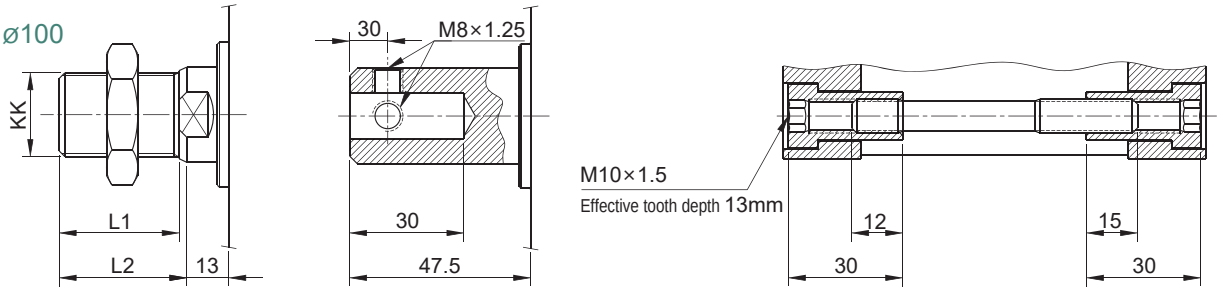

Unit : mm

Label / Bore Size	C	D	E	F	F1	MM	G	H	H1	H2	KK	L1	L2	Y
ø80	26	102	12	36	25	M16×2.0×21L	PT3/8	22	109	77	M22×1.5	30	32	12

Section No.	2	3	4	5
B	72	100.5	129	157.5

Section No.	Force Conversion (kgf/cm²) 4	5	6	7
1	201	251	301	351
2	382	477	572	667
3	563	703	843	983
4	744	929	1114	1299
5	925	1155	1385	1615
Return Pull Force (kgf/cm²)	181	226	271	316

Label / Bore Size	C	D	E	F	F1	MM	G	H	H1	H2	KK	L1	L2	Y
ø100	26	122	13	38	25	M16×2.0×21L	PT3/8	22	128	94	M22×1.5	30	32	12

Section No.	2	3	4	5
B	81.5	110	138.5	167

Section No.	Force Conversion (kgf/cm²) 4	5	6	7
1	314	393	471	351
2	608	760	912	1065
3	902	1127	1353	1580
4	1196	1494	1794	2095
5	1490	1861	2235	2610
Return Pull Force (kgf/cm²)	294	367	441	515

DJ2T ø125 / ø160

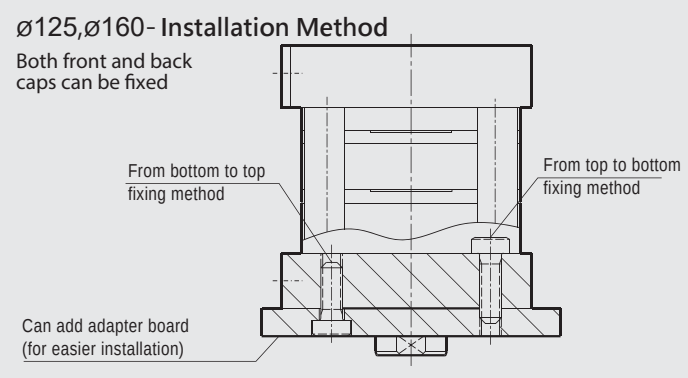

DJ2T (Interior Thread Type-F)

ø125, ø160

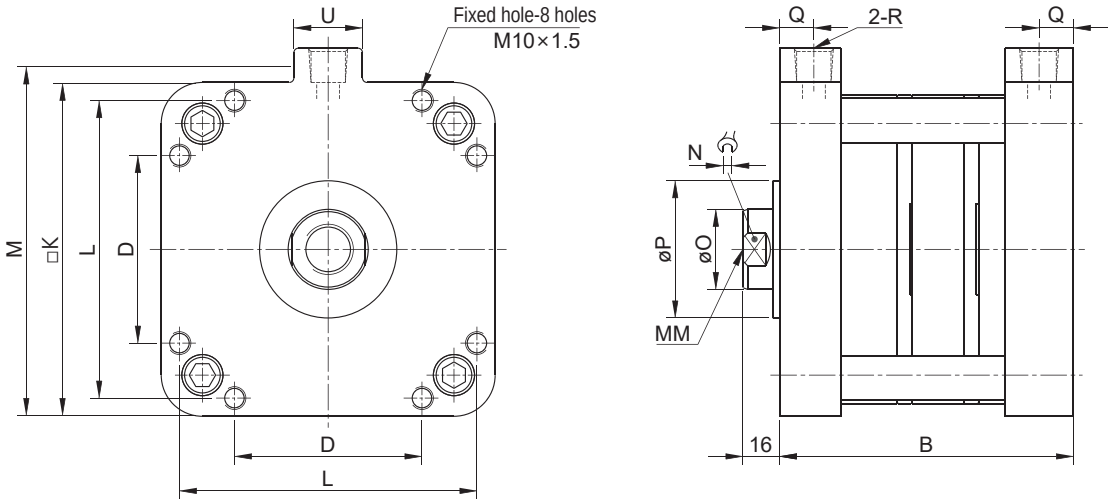

DJ2T (Exterior Thread Type-E / Interior Port Type-H)

ø125, ø160

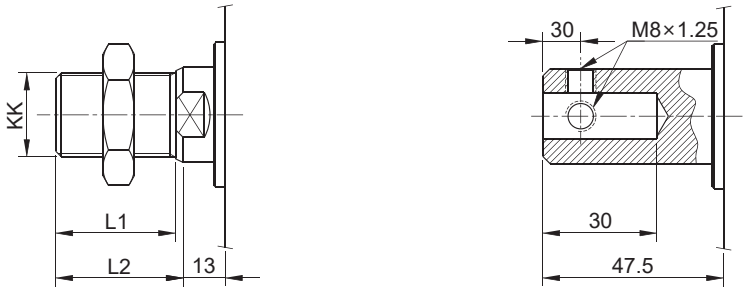

Unit : mm

Label / Bore Size	K	L	M	D	N	O	P	Q	R	MM	U	KK	L1	L2	Y	Section No.	Force Conversion (kgf/cm²) 4	5	6	7
																1	490	613	735	858
ø125	146	130	161	82	32	35	60	15	PT3/8	M22×2.5×32L	28	M27×2.0	40	43	18	2	941	1177	1412	1648
																3	1392	1741	2089	2438
																4	1843	2305	2766	3228
																5	2294	2869	3443	4018
Section No.	2				3					4		5					Return Pull Force (kgf/cm²)			
B	99.5				128.5					157.5		186.5					451	564	677	790

Label / Bore Size	K	L	M	D	N	O	P	Q	R	MM	U	KK	L1	L2	Y	Section No.	Force Conversion (kgf/cm²) 4	5	6	7
																1	803	1004	1205	1406
ø160	180	160	195	108	32	35	60	14	PT1/2	M22×2.5×32L	30	M27×2.0	40	43	18	2	1567	1959	2352	2744
																3	2331	2914	3499	4082
																4	3095	3869	4646	5420
																5	3859	4824	5793	6758
Section No.	2				3					4		5					Return Pull Force (kgf/cm²)			
B	100.5				130.5					160.5		190.5					764	955	1147	1338