1 Pnematic Drives

High Speed Series

Patent No. : M428240 / 156557 / ZL1201120543842.2 / ZL00203866.6

◎Robotic Arm / DHR2

HINAKA

DHR2 Category Description

K Pneumatic Buffer Cylinder

1.Seal design of Pneumatic Buffer Cylinder (seal ring) can withstand instantaneous pressures within 25kgl/cm^2.

2.The rod and piston body are integrated as one for perfect concentricity.

3.Seal rings can be used at high speeds up to 1000mm/s.

4.Buffer nut or external threads machined on both ends optional.

P Pull Cylinder

1.Enhanced design of extended guide ring (bearing) and dust remover withstands harsh environments.

2.Functions both as a buffer and buffer extension replacing the hydraulic buffering device.

3.Powerful dust removal capabilities.

4.Rubber cushions are installed at both ends to prevent the piston body from impact with front and rear covers.

H Fall Prevention Cylinder

1.When air pressure is lower than spring action pressure the Fall Prevention Cylinder will extend outward to prevent suction cup fixture from slipping.

2.Four screws combine the front and rear covers with the rod shaft making it stable and prevents swinging.

3.Reinforced double rod type can withstand higher lateral forces.

DHR2 Category Description

HINAKA
HINAKA Fluid Power Co., Ltd
Scrupulosity, Specialty, Sincerity, Satisfactory

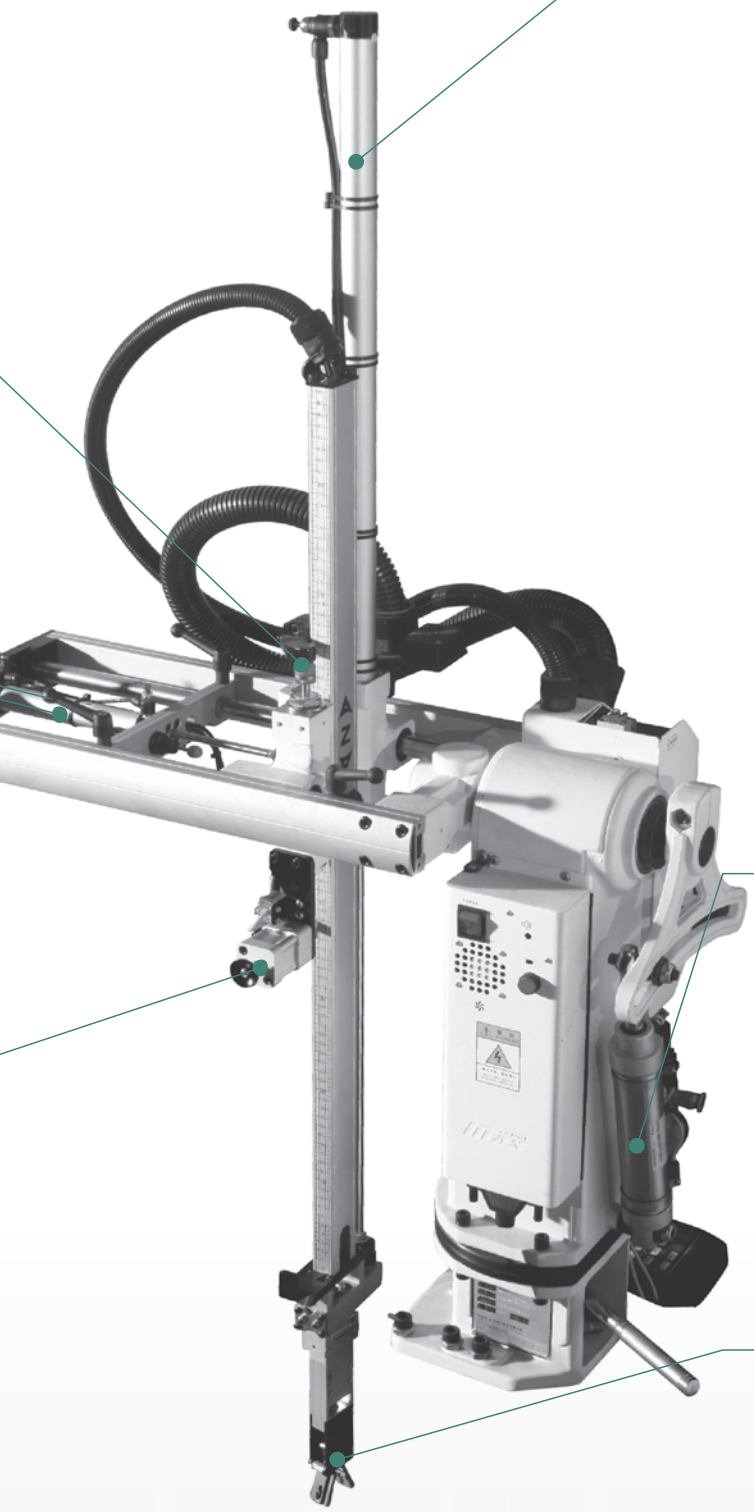

U Up and Down Cylinder

1.High speed action design (1000mm/s).

2.Cylinder will not break while swinging at high speeds.

3.Reinforced design with guide sleeve and dust remover able to resist lateral forces and harsh environments.

4.Rubber gaskets are installed at both ends to prevent the piston body from impact with front and rear covers.

C Lateral (Angle) Cylinder

1.Short dimensions and small cavity body style installed on the front end of the manipulator can reduce inertia and increase stability of manipulator.

2.Dignified and pleasant exterior design.

3.Service life averages more than five years.

S Swing Cylinder

1.Swing Cylinder especially designed for robots with single or double arms; adjustable buffers under high speeds and high frequencies offer the best cushioning results.

2.Dignified and pleasant exterior design.

3.Service life averages more than five years.

G Clamp Cylinder

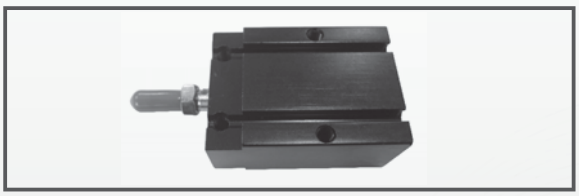

1.Clamp Cylinders especially designed for robots with an extended copper sleeve designed to increase service life.

2.Designed with a large clamping force toggle mechanism which does not easily loosen during motion.

DHR2 U Type And Down Cylinder & P Type Pull Cylinder

Ordering Guidelines

DHR 2 - U 25 M 650 PPV - L35 M10×1.25 - G48R 2

1. **High Speed Pneumatic Cylinder for Injection Molding Machine Loading and Unloading Robotic Arm**
2. Mounting methods

   1 : Front cover external thread .

   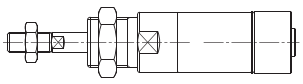

   2 : Front cover internal screw hole.

   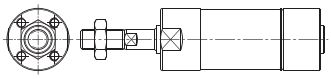

3. Type of Pneumatic Cylinder
   U: Up and Down Cylinder / **P**: Pull Cylinder
4. Pneumatic Cylinder Bore Diameter **ø20~ø80**
5. Sensor Device
   M: With Magnet / **N**: Without Magnet
6. Stroke (ST)
7. Adjustable End Cushions
   Unmarked :Without Cushion / **PPV**: Double
   FPPV: Front / **RPPV**: Rear
8. Piston rod extension specification-L35/W80
   L: External threads / **35**: Thread length
   W: Without external threads / **80**: Extended length
9. Thread Specifications
   (Manufactured according to standard specifications if not indicated)
10. Sensor Type
    (Sensor Type (Refer to Section 8 Accessories: Sensor Devices)
11. Number of Sensors

Piston rod extension specification :

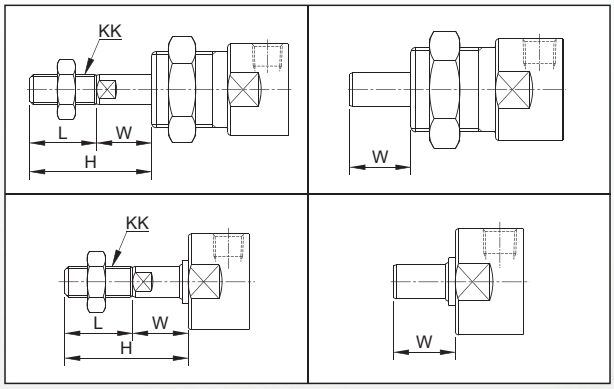

Size Comparison Table :

Label / Bore Size	KK	L	W	H
ø20	M8×1.25	28	17	35
ø25	M10×1.25	22	18	40
ø32	M10×1.25	22	18	40
ø40	M12×1.25	30	20	50
ø50	M18×1.5	40	10	50
ø63	M18×1.5	40	10	50
ø80	M22×1.5	40	31	71

Symbol Key :

H: Length of piston rod extension

L: Length of Thread

KK: Thread Specification

W: Non-threaded total extension

Ordering Guidelines

DHR2 S - 40 M 125 PPV - L32 M12×1.25 - G48R 2 - B014

1. **High Speed Pneumatic Cylinder for Injection Molding Machine Loading and Unloading Robotic Arm**
2. Type of Pneumatic Cylinder
   S: Swing Cylinder
3. Pneumatic Cylinder Bore Diameter **ø40**
4. Sensor Device
   M:With Magnet / **N**: Without Magnet
5. Stroke (ST)
6. Adjustable End Cushions
   Unmarked :Without Cushion / **PPV** : Double
   FPPV: Front / **RPPV**: Rear
7. Piston rod extension specification-L32
   L: External threads / **32:** Thread length
8. Thread Specifications
   (Manufactured according to standard specifications if not indicated)
9. Sensor Type
   Sensor Type (Refer to Section 8 Accessories: Sensor Devices)
10. Number of Sensors
11. Stud- End Model
    Refer to "Back cover Stud-End Model Symbol"

Back Cover Stud-End Model Symbol :

B015 : Needle Roller Bearing Type

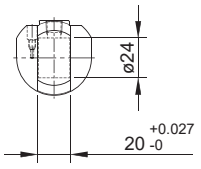

B014 : Bearing Type

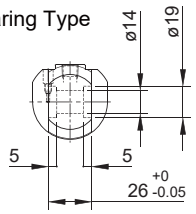

B010 : Bearing Type

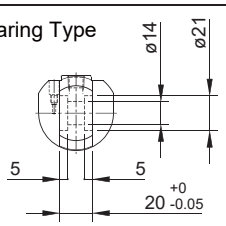

Piston rod extension specification :

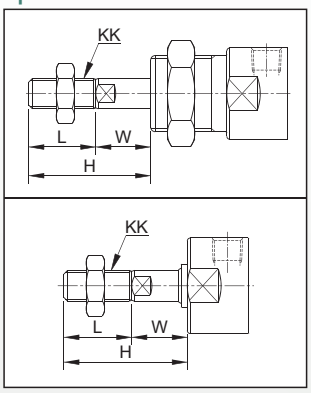

Size Comparison Table :

Label / Bore Size	KK	L	W	H
ø40	M12×1.25	32	7	39

Symbol Key :

H: Length of piston rod extension

L: Length of Thread

KK: Thread Specification

W: Non-threaded total extension

DHR2 C Lateral (Angle) Cylinder

Ordering Guidelines

DHR2 C - 32 M 50 PPV - L22 M10×1.25 - G48R 2 - B005

1. **High Speed Pneumatic Cylinder for Injection Molding Machine Loading and Unloading Robotic Arm**
2. Type of Pneumatic Cylinder
   C : Lateral (Angle) Cylinder
3. Pneumatic Cylinder Bore Size **ø32~ø80**
4. Sensor Device
   M: With Magnet / **N**: Without Magnet
5. Stroke (ST)
6. Adjustable End Cushions
7. Piston Rod Extension Specification-L22/W80
   L: External threads / **22:** Thread length
   W: Without external threads / **80:** Extended length
8. Thread Specifications
   (Manufactured according to standard specifications if not indicated)
9. Sensor Type
   Sensor Type (Refer to Section 8 Accessories: Sensor Devices)
10. Number of Sensors
11. Distinctive Mark at Front End of Piston Rod
    (When changed the front end of piston rod needs to be marked)
    Unmarked: Standard product size comparison table
    B005: Refer to "Distinctive Mark at Front End of Piston Rod"
    (Indicates pin hole at front end of piston rod)

Front End of Piston Rod Distinctive Mark :

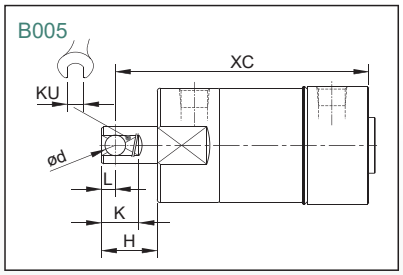

Size Comparison Table

Label / Bore Size	KK	L	W	H	KU
ø32	M10×1.25	22	18	40	10
ø40	M12×1.25	30	20	50	14
ø50	M18×1.5	40	10	75	17
ø63	M18×1.5	40	10	75	17
ø80	M22×1.5	40	31	75	22

Piston Rod Extension Specifications :

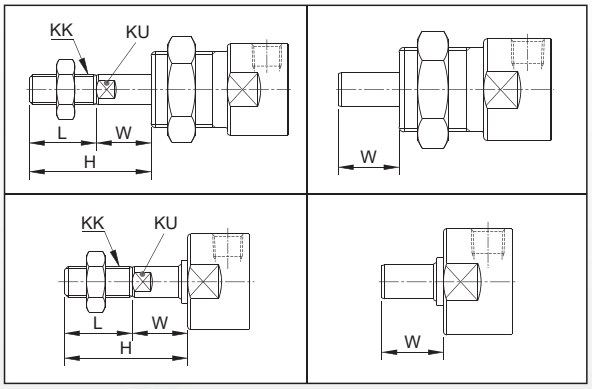

Symbol Key :

KU : Width across flat

L : Hole half diameter to rod end

ød : Hole diameter
(Customized by order)

K : Face length
(Customized by order)

H : Length of piston rod extension

XC: Installation size
(Customized by order)

KK: Thread Specification

W: Non-threaded total extension

L: Length of Thread

DHR2 K Pneumatic Buffer Cylinder

Ordering Guidelines

DHR2 K - 20 N 70 - J

1. **High Speed Pneumatic Cylinder for Injection Molding Machine Loading and Unloading Robotic Arm**
2. Type of Pneumatic Cylinder
   K: Pneumatic Buffer Cylinder
3. Pneumatic Cylinder Bore Diameter
4. Sensor Device
   N : Without Magnet
5. Stroke(ST)
6. Buffer Head
   J : No buffer head
   Unmarked : With buffer head

DHR2 H Fall Prevention Cylinder

Ordering Guidelines

DHR2 H - 20 N 15 - 3

1. **High Speed Pneumatic Cylinder for Injection Molding Machine Loading and Unloading Robotic Arm**
2. Type of Pneumatic Cylinder
   H : Fall Prevention
3. Pneumatic Cylinder Bore Size
4. Magnetic Device
   N : Without Magne
5. Stroke (ST)
6. Pressure Source
   4: Stretches out at 4kgf/cm^2
   3: Stretches out at 3kgf/cm^2

DHR2 J/G Clamp Cylinder

Ordering Guidelines

DHR2 J - 20 M 14

1. **High Speed Pneumatic Cylinder for Injection Molding Machine Loading and Unloading Robotic Arm**
2. Clamp Cylinder
   - **J:** Claw plates included
   - **G:** Claw plates not included
3. Pneumatic Cylinder Bore Size
4. Sensor Device
   - **M:** With Magnet
5. Stroke (ST)

DHR2 Internal Structure

DHR2 Internal Structure :

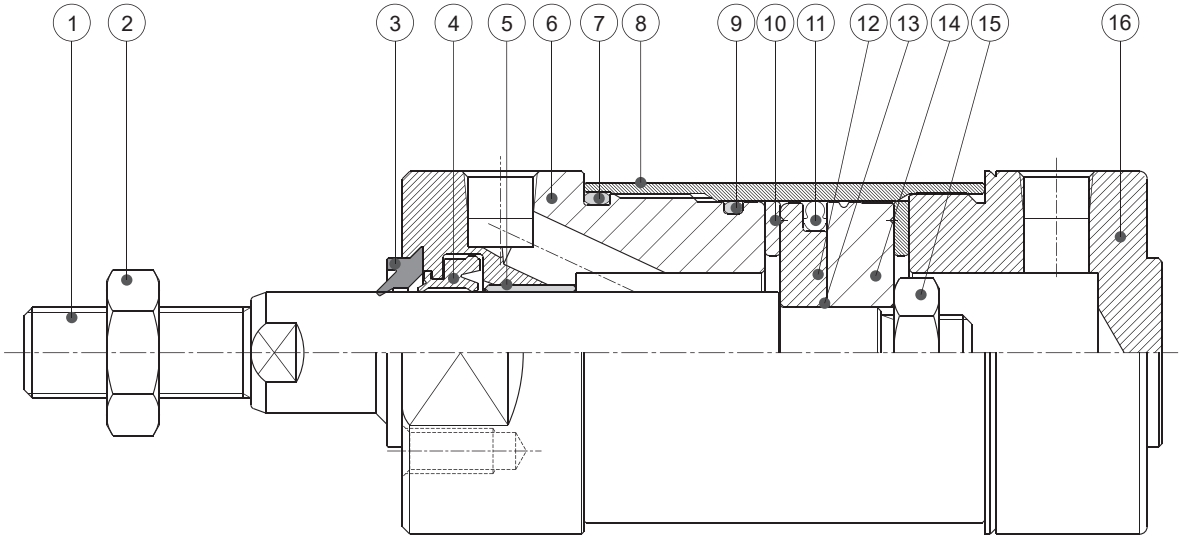

Components :

Item	Part Name	Material	Item	Part Name	Material
1	Piston Rod	S45C	9	O-Ring	NBR
2	Hex Nut	Iron	10	Buffer Pad	NBR
3	Wiper Seal	PU	11	8-Ring	NBR
4	Rod Shaft Wiper Seal	NBR	12	Front Piston Body	A6061
5	Self-oiling Bearing	Copper	13	O-Ring	NBR
6	Front Cap	A6061	14	Rear Piston Body	POM
7	O-Ring	NBR	15	Hex Nut	SS400
8	Cylinder Tube	A6061	16	Rear Cap	A6061

DHR2H Internal Structure

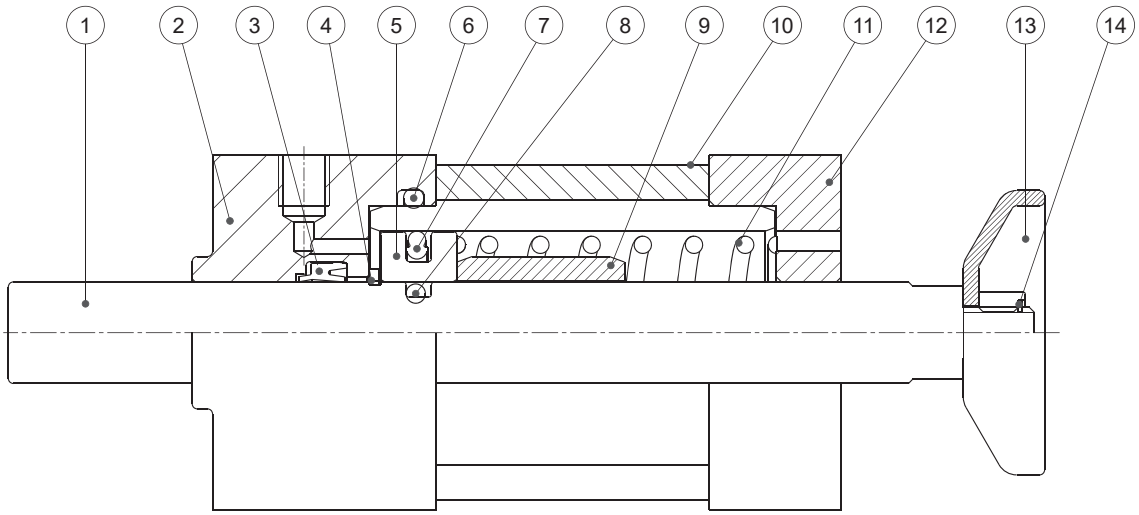

Components :

Item	Part Name	Material	Item	Part Name	Material
1	Piston Rod	S45C	8	O-Ring	NBR
2	Front Cap	A6061	9	Coil Spring Outer Guiding	A6061
3	Rod Seal	NBR	10	Cylinder Tube	A6061
4	C-Ring	SWP	11	Compression Spring	SWP
5	Piston Body	A6061	12	Rear Cap	A6061
6	O-Ring	NBR	13	Pull Latch	SS400
7	8-Ring	NBR	14	Nut	SS400

Feature Description：

Up and Down Cylinder

- The Up and Down Cylinder is designed for high speed motion (1000mm/s).
- Cylinder tube will not break during high speeds or rapid shaking.
- Reinforced design with guide sleeve and dust removal can resist lateral forces and harsh environments.
- Rubber gaskets are installed at both ends to prevent the piston body from impact with front and rear covers.

DHR1U Up and Down Cylinder / DHR1P Pull Cylinder

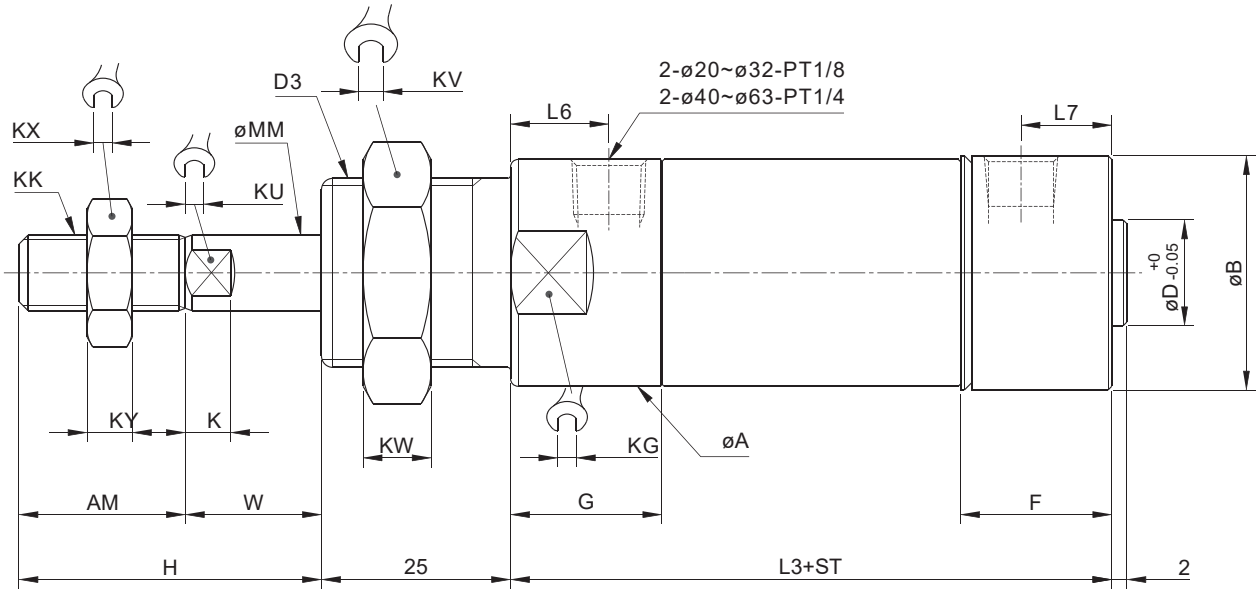

ST=Stroke Unit : mm

Label / Bore Size	L3 Standard Type	L3 Magnetic Type	K	D	AM	W	H	KK	KY	KX	KU	MM	KW	KV	KG	D3	L6	L7	G	F	A	B
ø20	75.5	72.5	7	12	18	17	35	M8×1.25	6	12	7	8	8	27	24	M20×1.5	12	10	20	18	25	26
ø25	79.5	76.5	8	14	22	18	40	M10×1.25	6	17	8	10	9	30	28	M25×2.0	13	12	20	20	30	31
ø32	92	88	8	18	22	18	40	M10×1.25	6	17	10	12	9	36	35	M30×2.0	12	12	20	21.5	37	38
ø40	98.5	94.5	9	25	30	20	50	M12×1.25	7	19	14	16	9	41	43	M35×2.0	13	12	24	21.5	45	48
ø50	121.4	118	9	30	40	10	50	M18×1.5	10	27	17	20	10	46	52	M36×2.0	14	14	25	25	55	55
ø63	123.6	120	9	32	40	10	50	M18×1.5	10	27	17	20	10	46	65	M36×2.0	14	14	25	25	68	68
ø80	144.5	140.5	9	40	60	20	80	M22×1.5	8	26	22	25	13	86	84	M60×2.0	20	17	30	30	87	89

DHR2 2U/2P

Feature Description：

Pull Cylinder

- Design of extended guide ring (bearing) and dust removal seal withstands harsh environments.
- Equipped with both buffer and buffer extension replacing hydraulic buffer.
- Equipped with enhanced dust elimination function.
- Rubber gaskets are installed at both ends to prevent the piston body from impact with front and rear covers.

DHR2U Up and Down Cylinder / DHR2P Pull Cylinder

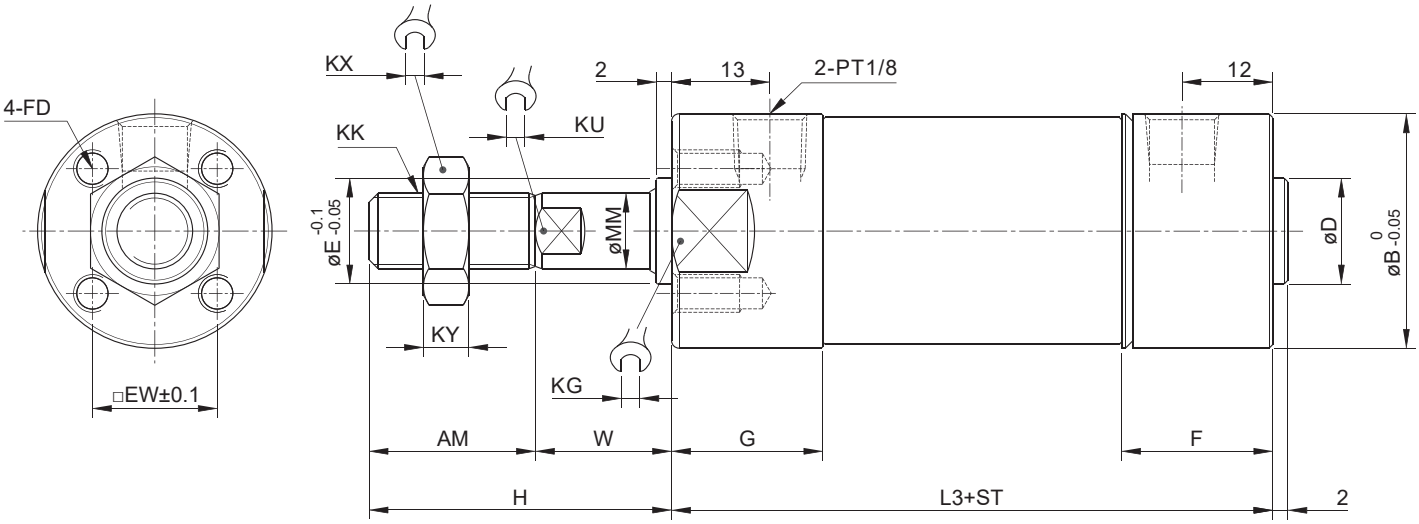

ST=Stroke Unit : mm

Label / Bore Size	L3 Standard Type	L3 Magnetic Type	D	AM	W	H	KK	KY	KX	KU	MM	E	EW	KG	D3	L6	L7	G	F Standard Type	F Magnetic Type	A	B
ø20	75.5	72.5	12	35	17	52	M8×1.25	6	12	7	8	12	14	25	M4×0.7Depth7	12	10	18	18		25	26
ø25	79.5	76.5	14	35	18	53	M10×1.25	6	17	9	10	14	16.5	29	M5×0.8Depth9	13	12	20	20		30	31
ø32	92	88	18	35	18	53	M10×1.25	6	17	10	12	18	20	36	M5×0.8Depth11	12	12	21.5	22		37	38
ø40	98.5	94.5	25	35	18	53	M12×1.25	7	19	14	16	25	26	44	M6×1.0Depth12	13	12	21.5	22		45	48
ø50	118	118	30	58	17	75	M18×1.5	10	27	17	20	30	32	52	M8×1.25Depth10	14	14	25	25		55	55
ø63	120	120	32	58	17	75	M18×1.5	10	27	17	20	-	38	65	M10×1.5Depth10	14	14	25	25		68	68
ø80	144.5	140.5	40	58	17	75	M22×1.5	8	26	22	25	-	50	85	M10×1.5Depth12	17	17	30	30		87	89
ø100	153	146	50	58	17	75	M24×1.5	9	32	26	30	-	60	100	M12×1.75Depth17	20	20	30	30	23	110	110

DHR2S

Feature Description：

- The Swing Cylinder is especially designed for robots with single or double arms; adjustable buffers under high speeds and high frequencies offer the best cushioning results.
- Dignified and pleasant exterior design.
- Service life averages more than five years.

DHR2S-40 Swing Cylinder

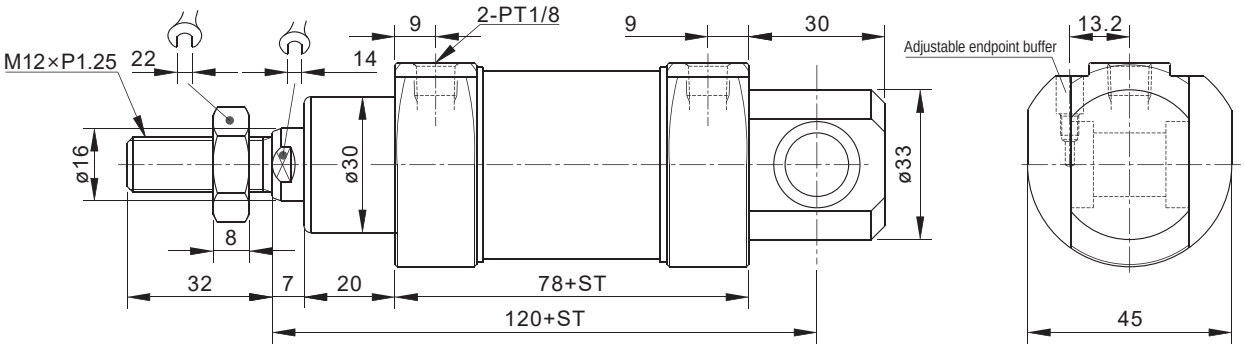

※Tail end style

DHR2K

Feature Description ：

- Buffer Cylinder design of rod seal (seal ring) withstands instant pressures within 25kgf/cm^2.
- Integrated rod and piston body offer excellent concentricity.
- Seals can be used at high speeds (within 1000mm/s).
- Buffer nut or external threads machined on both ends optional.

DHR2K-20N70 (R-Shaped) Buffer Pneumatic Cylinder

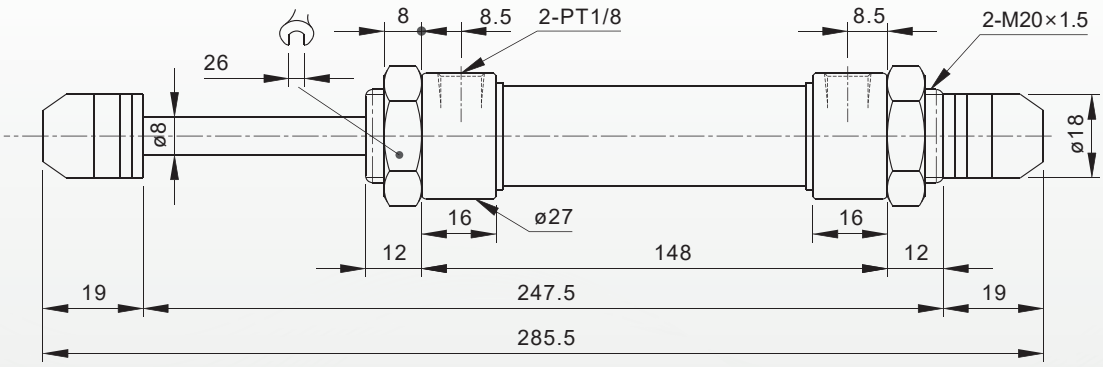

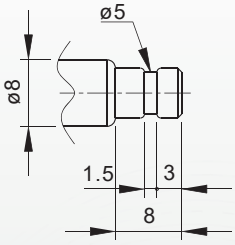

※Size for piston rod buffer head front end not available.

DHR2C

Feature Description:

- Short dimensions and small cavity body style installed on the front end of the manipulator can reduce inertia and increase stability of manipulator.
- Dignified and pleasant exterior design.
- Service life averages more than five years.

DHR2C Lateral (Angle) Cylinde

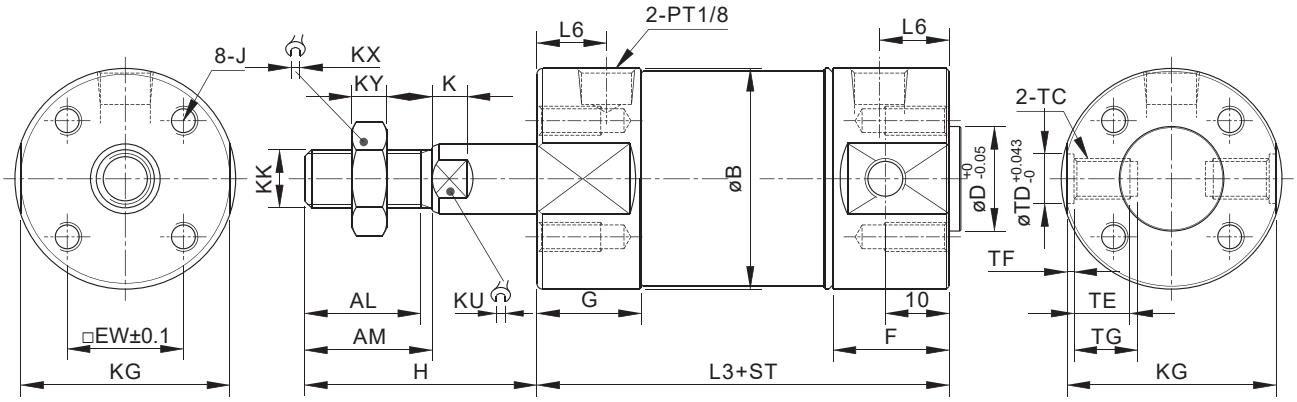

ST=Stroke Unit : mm

Label / Bore Size	MM	EW	KG	L3 Standard Type	L3 Magnetic Type	L7	L6	G Standard Type	G Magnetic Type	F Standard Type	F Magnetic Type	B	D	J	L	H	KK	KY	KX	KU
ø32	12	20	36	71	88	12	12	18	20	21.5	21.5	38	18	M5×0.8深11	22	40	M10×1.25	6	17	10
ø40	16	26	44	78	94.5	13	13	22	24	21.5	21.5	48	25	M6×1.0深12	30	50	M14×1.5	8	19	14
ø50	20	32	52	118	118	14	14	25	25	25	25	55	30	M8×1.25深10	58	75	M18×1.5	9	27	17
ø63	20	38	65	120	120	14	14	25	25	25	25	68	32	M10×1.5深10	58	75	M18×1.5	9	27	17
ø80	25	50	85	144.5	140.5	20	17	30	30	30	30	89	40	M10×1.5深12	58	75	M22×1.5	9	27	22
ø100	30	60	100	153	146	20	15	30	30	30	23	110	50	M12×1.75深17	75	92	M24×1.5	9	32	26

Feature Description: :

- When air pressure is lower than spring action pressure the Fall Prevention Cylinder will extend outward to prevent suction cup fixture from slipping.
- Four screws combine the front and rear covers with the rod shaft making it stable and swing resistant.
- Reinforced double rod type can withstand higher lateral forces.

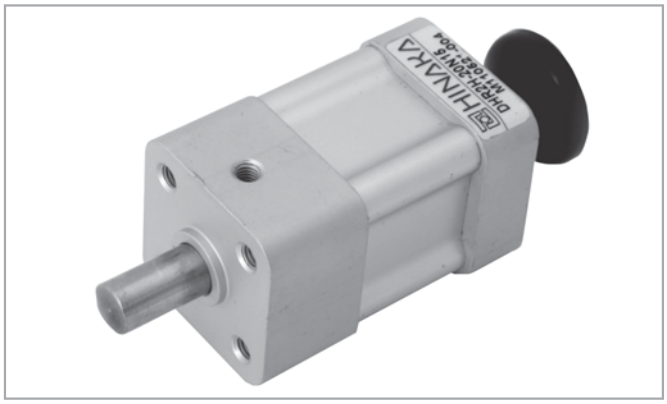

DHR2H-20N15 (H-Shaped) Fall Prevention Cylinder

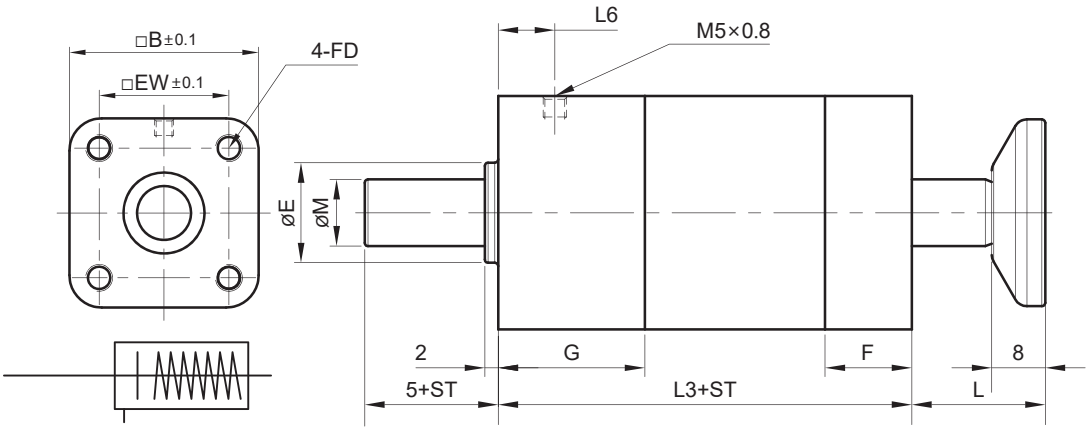

ST=Stroke Unit : mm

Label / Bore Size	EW	B	FD	E	M	L6	G	F	L3	L
ø20	24	35	M5×0.8	15	10	8.5	22	13	47	12
ø25	28	45	M6×1.0	18	15	11	24	15	52	11

DHR2-J/G

Feature Description：

- Clamping Pneumatic Cylinder especially designed for robots has an extended copper sleeve which increases service life.
- Designed with a large clamping force toggle mechanism which does not loosen during motion.

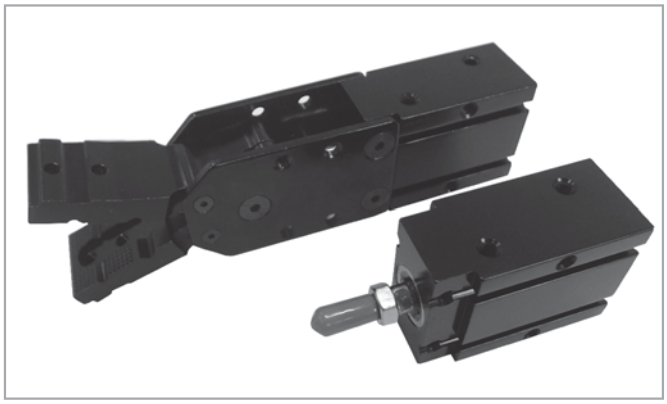

DHR2-J Clamping Cylinder (With Claws)

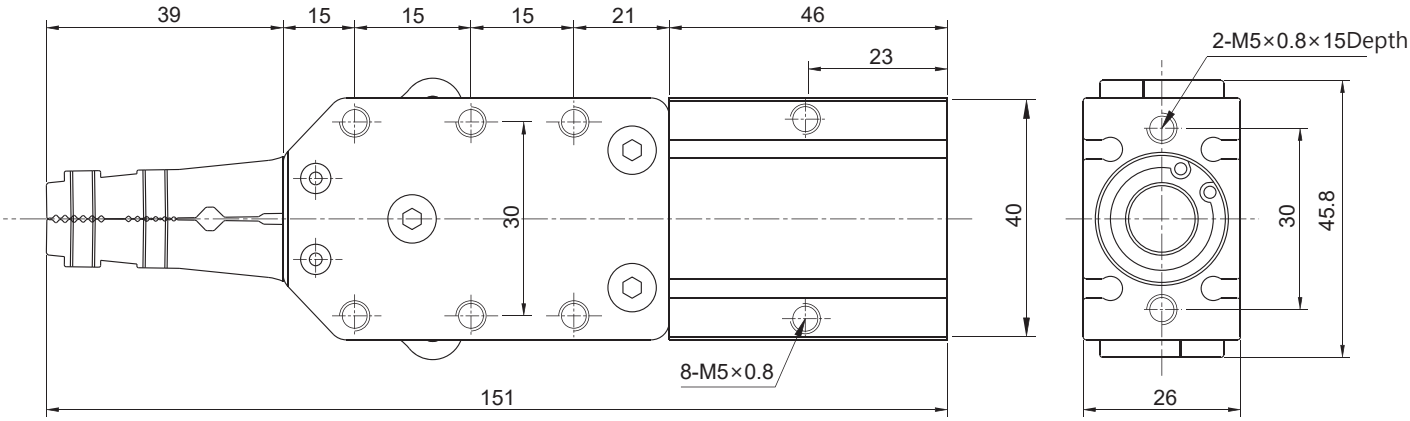
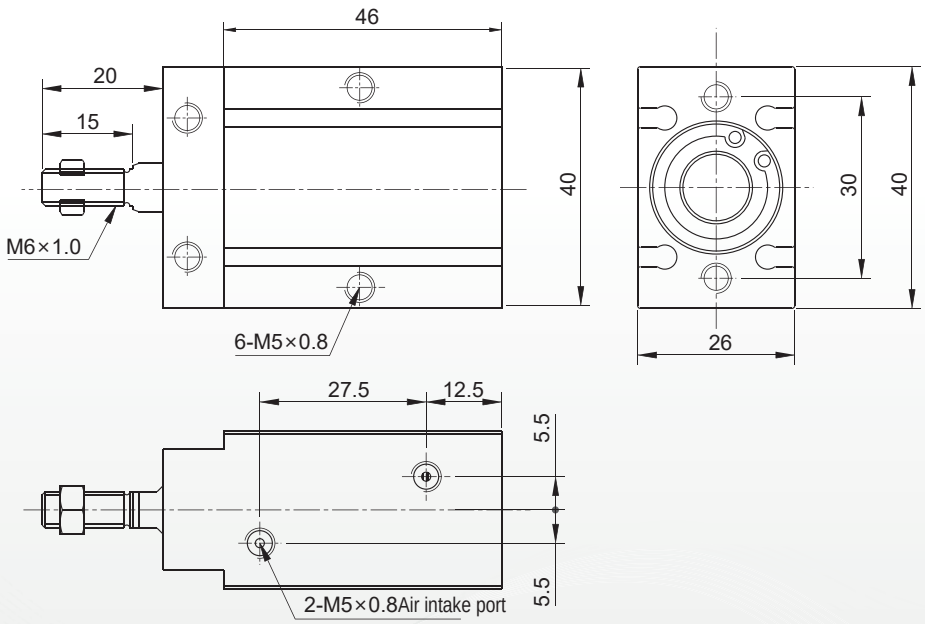
DHR2-G Clamping Cylinder (Without Claws)