1 Pnematic Drives

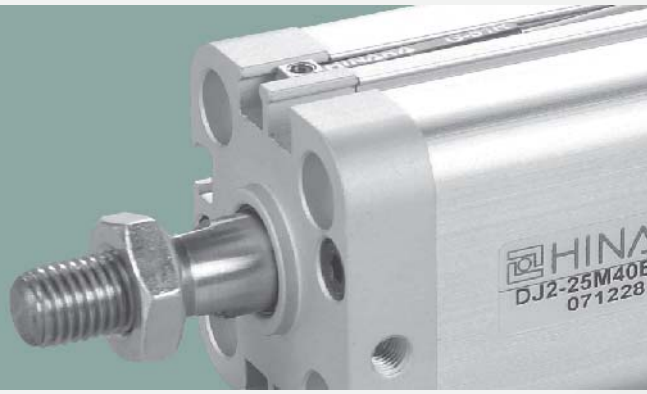

Standard Cylinder Series

◎Japanese Compact Pneumatic Cylinder / **DJ2**

(Compatible with SMC CQ2 Series installation sizes)

HINAKA

DJ2 Ordering Guidelines

Ordering Guidelines

DJ2 Y - 32 M 50 F - FA - Y - G51R 2

1 **Model**

2 **Pneumatic Cylinder Type**

DJ2 Standard	**DJ2E** Adjustable Stroke Double End Rod
DJ2D Double Rod	**DJ2EY** Adjustable Stroke Double End Rod with Guide
DJ2Y Single End Rod With Guide	**DJ2B** Adjustable Return Stroke Single End Rod
DJ2DY Double End Rod With Guide	**DJ2BY** Adjustable Return Stroke Single End Rod with Guide
	DJ2T Tandem
	DJ2M Multi-Position

3 **Bore Size**

4 **Sensor Device**

M : With Magnet / **N** :Without Magnet

5 **Stroke (ST)**

6 **Rod Structure**

F: Female Thread / **E**: Male Thread

7 **Mounting Accessories**

SD	**FA**
FB	**CA**
CB	**LZ**
LA	**TI**

8 **Rod End Accessories**

I	**P**
Y	**T**

9 **Sensor Type**

(Refer to Section 8 Accessories: Sensor Devices)

10 **Number of Sensors**

DJ2 Internal Structure

Internal Structure：

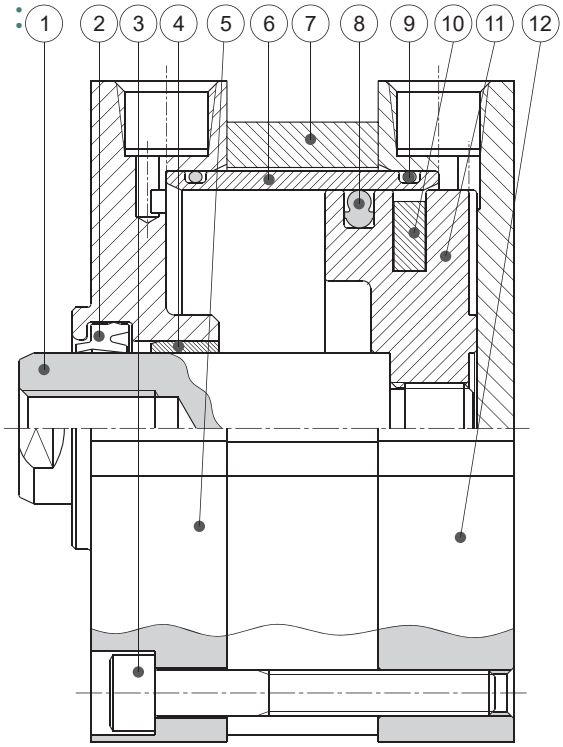

Components：

Item	Part Name	Material	Item	Part Name	Material
1	Piston Rod	S45C	7	Outer Bushing	AA6063
2	Rod Seal	NBR	8	8-Ring	NBR
3	Tie Rod	SCM435	9	O-Ring	NBR
4	Self-oiling Bearing	Sintered Copper	10	Magnetic Ring	Rubber
5	Front Cap	A6061	11	Piston Body	AA6061
6	Cylinder Tube	A6063	12	Rear Cap	AA6061

Applicable Conditions：

Bore Size ø	Function	Working Fluid	Temperature Range	Operating Speed Range	Operating Oi	Proof Pressure	Operating Pressure Range
12,16,20,25,32 40,50,63,80,100 125,160,200	Single Acting/ Double Acting	Filtered Compressed Air	-10°C~+60°C	50~1000mm/s	Not Necessary	1.471MPa (15kgf/cm²)	0.098~0.97MPa (1.0~9.9kgf/cm²)

DJ2

Feature Description：

Model: DJ2
Standard Type

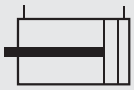

Model: DJ2..M
Standard with Magnetic

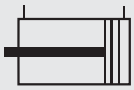

DJ2 (Standard- Female Thread)

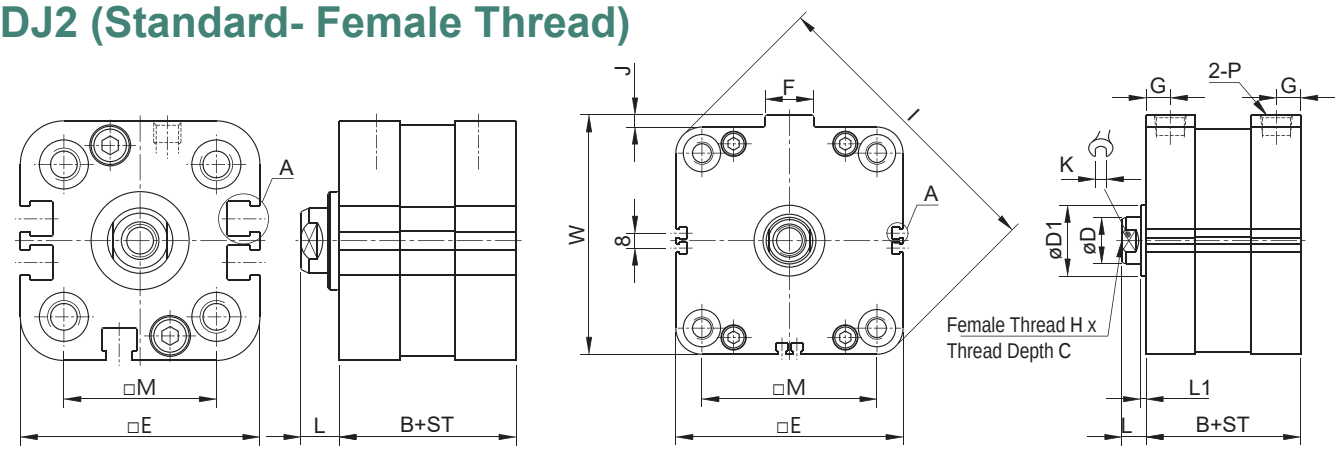

DJ2 (Standard- Male Thread)

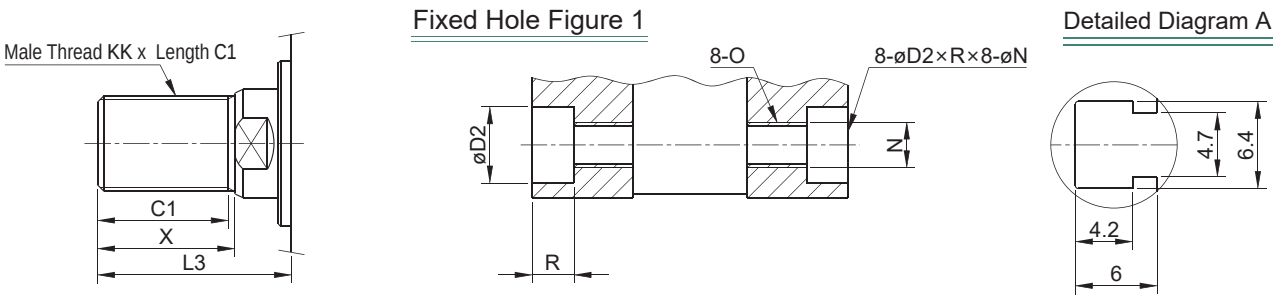

ST=Stroke Unit : mm

Label / Bore Size	B Standard Type	B Magnetic Type	øD	øD1	□E	F	G	H×C	I	J	K	L	L1	□M	P	W	KK	C1	X	L3	øD2×R×øN	O
ø12	17	24	6	12	28	-	5	M3×0.5×6	35	-	5	6	2	15.5	M5×0.8	-	M5×0.8	9	10.5	16.5	6×3.2×3.3	M4×0.7
ø16	18.5	25.5	8	14	33	-	5.5	M4×0.7×8	41.3	-	6	7	2	20	M5×0.8	-	M6×1.0	10	12	19	6.5×3.5×3.3	M4×0.7
ø20	19.5	26.5	10	16	40	-	5.5	M5×0.8×7	50.5	-	8	7	2	25.5	M5×0.8	-	M8×1.25	12	14	21	9×5.2×5	M6×1.0
ø25	22.5	29.5	12	18	44	-	5.5	M6×1.0×10	56.4	-	10	7	2	28	M5×0.8	-	M10×1.25	15	17.5	24.5	9×5.2×5	M6×1.0
ø32	23	30	16	26	51	20	5.5	M8×1.25×12	65.5	3.5	14	8.5	2.5	34	PT1/8	54.5	M14×1.5	20	21.5	30	9×5.2×5	M6×1.0
ø40	29.5	29.5	16	28	59	20	8	M8×1.25×13	75.6	3.5	14	8.5	2.5	40	PT1/8	62.5	M14×1.5	20	21.5	30	9×5.2×5	M6×1.0
ø50	30.5	30.5	20	32	70	22	9.5	M10×1.5×15	90.7	4.5	17	9.5	2.5	50	PT1/4	74.5	M18×1.5	23	25.5	35	11×6.5×6.75	M8×1.25
ø63	36	36	20	32	83	21.5	10	M10×1.5×18	107.9	4.5	17	9.5	2.5	60	PT1/4	87.5	M18×1.5	23	25.5	35	13×8.5×8.5	M10×1.5
ø80	43.5	43.5	25	36	102	26	12	M16×2.0×21	134.3	6.5	22	13	3	77	PT3/8	108.5	M22×1.5	30	31.5	44.5	18×11×10.25	M12×1.75
ø100	53	53	25	38	122	26	13	M16×2.0×21	160.9	6.5	22	13	3	94	PT3/8	128.5	M22×1.5	30	31.5	44.5	20×11×10.25	M12×1.75

Feature Description：

Model：DJ2D
Dual Rod Type

Model：DJ2D..M
Dual Rod Magnetic Type

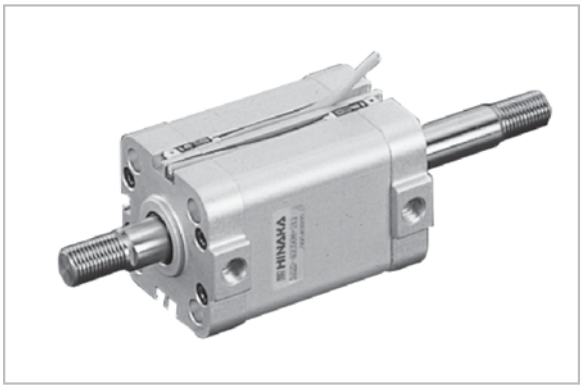

DJ2D (Dual Rod - Female Thread)

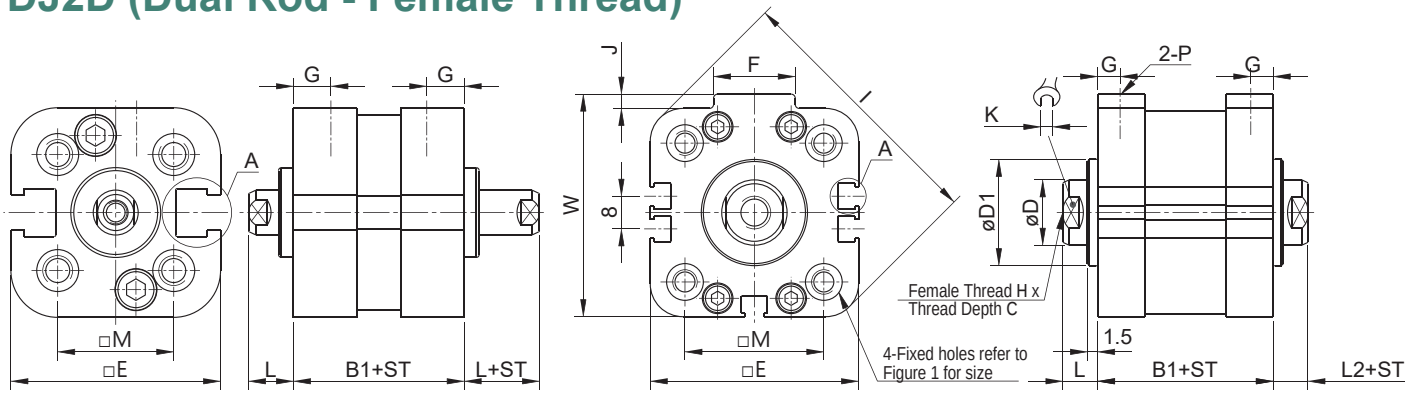

DJ2D (Dual Rod - Male Thread)

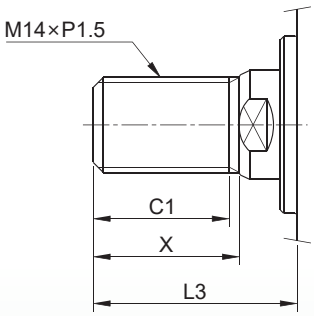

Fixed Hole Figure 1

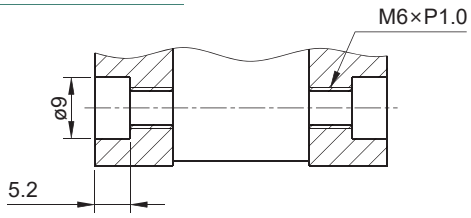

Detailed Diagram A

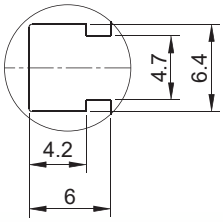

ST=Stroke
Unit：mm

Bore Size \ Label	B1	
	Standard Type	Magnetic Type
ø12	22.8	29.8
ø16	25.25	32.25
ø20	24	31
ø25	29.7	36.7
ø32	30.5	37.5
ø40	39	39
ø50	41.5	41.5
ø63	48	48
ø80	56	56
ø100	66.5	66.5

※ Refer to Standard Type for other dimensions.

DJ2Y/DY

Feature Description：

Model：DJ2Y
Single Rod with Guide

Model：DJ2Y..M
Single Rod Magnetic with Guide

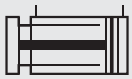

Model：DJ2DY
Dual Rod Magnetic with Guide

Model：DJ2DY..M
Dual Rod Magnetic with Guide

DJ2Y (Single Rod with Guide)

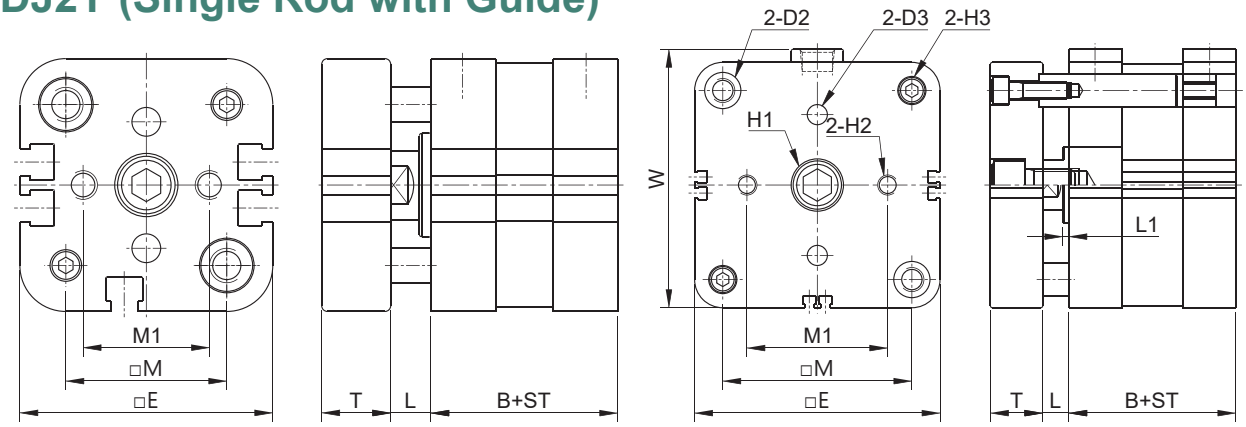

DJ2DY (Dual Rod with Guide)

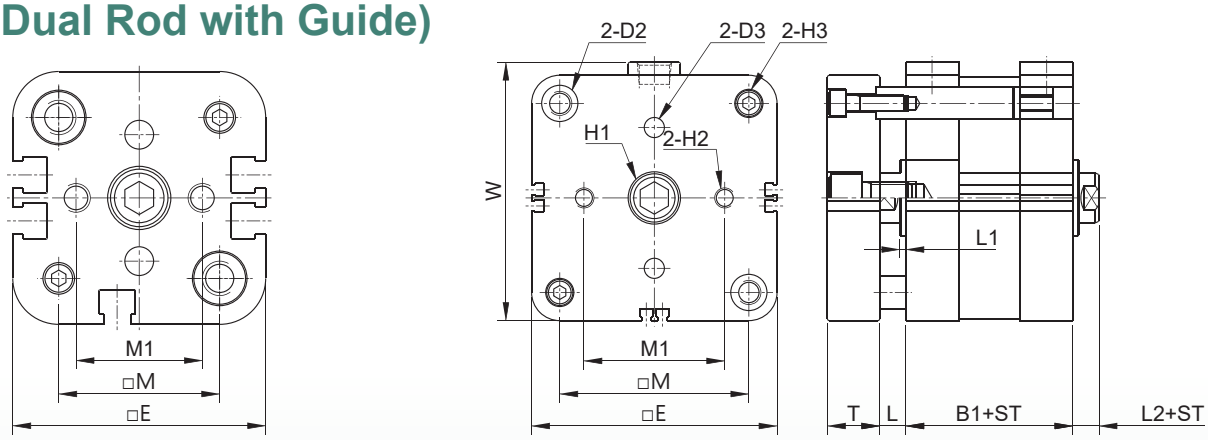

ST=Stroke Unit：mm

Label / Bore Size	B		B1		ØD2	ØD3	H1	H2	H3	□M1	T	W
	Standard Type	Magnetic Type	Standard Type	Magnetic Type								
ø12	17	24	22.8	29.8	6	3	M3	M3	M3	11	8	-
ø16	18.5	25.5	25.25	32.25	6	4	M4	M3	M3	15	9.5	-
ø20	19.5	26.5	24	31	9.5	5	M5	M5	M3	20	11	-
ø25	22.5	29.5	29.7	36.7	9.5	5	M6	M5	M3	22	12	-
ø32	23	30	30.5	37.5	9.5	5	M8	M5	M3	26	14	54.5
ø40	29.5	29.5	39	39	9.5	5	M8	M5	M5	30	14	62.5
ø50	30.5	30.5	41.5	41.5	11	6	M10	M6	M5	38	17	74.5
ø63	36	36	48	48	14	6	M10	M6	M6	40	17	87.5
ø80	43.5	43.5	56	56	18	8	M16	M8	M8	52	24	105.5
ø100	53	53	66.5	66.5	18	10	M20	M10	M8	70	26	128.5

※ Refer to Standard Type for other dimensions.

DJ2E/EY

HINAKA
HINAKA Fluid Power Co., Ltd
Scrupulosity, Specialty, Sincerity, Satisfactory

Feature Description：

Model: DJ2E
Adjustable Dual Rod Stroke

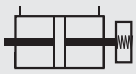

Model: DJ2E..M
Adjustable Dual Rod Stroke with Guide

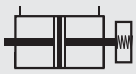

Model: DJ2EY
Adjustable Magnetic Dual Rod Stroke

Model: DJ2EY..M
Adjustable Dual Rod Stroke Magnetic with Guide

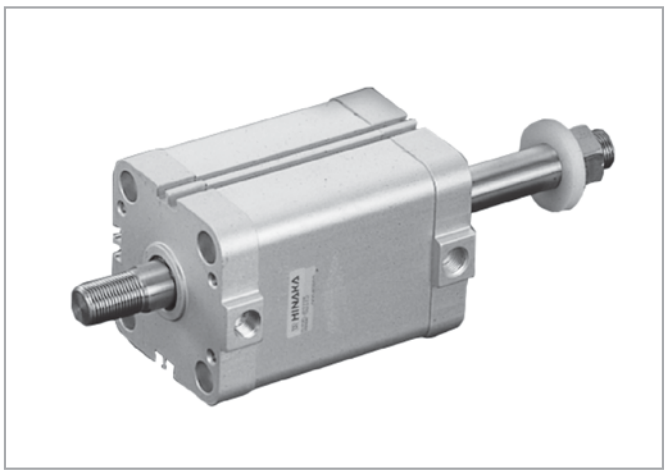

DJ2E (Adjustable Dual Rod Stroke)

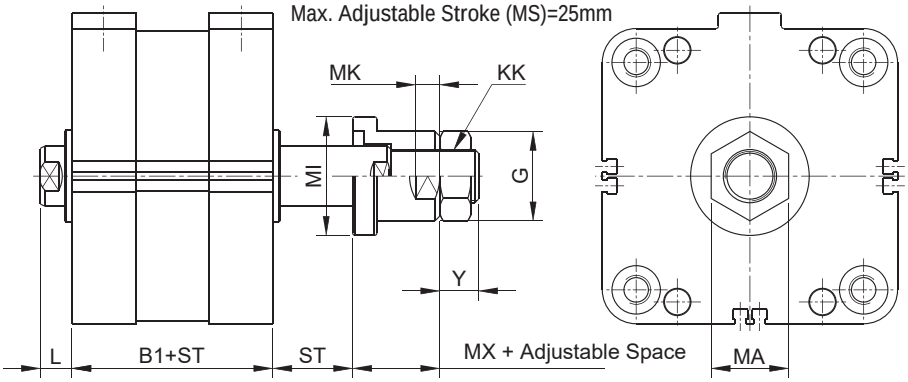

DJ2EY (Adjustable Dual Rod Stroke with Guide)

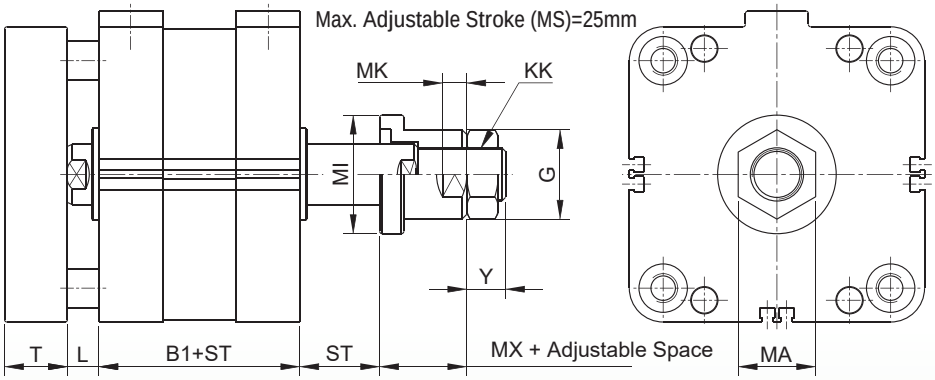

ST=Stroke Unit : mm

Label / Bore Size	B1 Standard Type	B1 Magnetic Type	øG	Y	MA	øMI	MX	T	Adjustable Space
ø12	22.8	29.8	17	7	13	20	14	8	25/50
ø16	25.25	32.25	19	7	14	22	16	9.5	
ø20	24	31	21	8	19	24	18	11	
ø25	29.7	36.7	23	9	19	27	20	12	
ø32	30.5	37.5	27	11	24	38	23.5	14	
ø40	39	39	27	11	24	38	23.5	14	
ø50	41.5	41.5	31	14	27	42	28.5	17	
ø63	48	48	31	14	27	42	28.5	17	
ø80	56	56	37	16	32	49	36	24	
ø100	66.5	66.5	37	16	32	48	36	26	

※ Refer to Standard Type for other dimensions.

DJ2B/BY

Feature Description：

Model: DJ2B
Adjustable Single Rod
Return Stroke

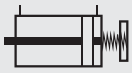

Model: DJ2B..M
Adjustable Magnetic Single Rod
Return Stroke

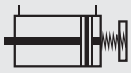

Model: DJ2BY
Adjustable Single Rod
Return Stroke with Guide

Model: DJ2BY..M
Adjustable Magnetic Single Rod
Return Stroke with Guide

DJ2B (Adjustable Single Rod Return Stroke)

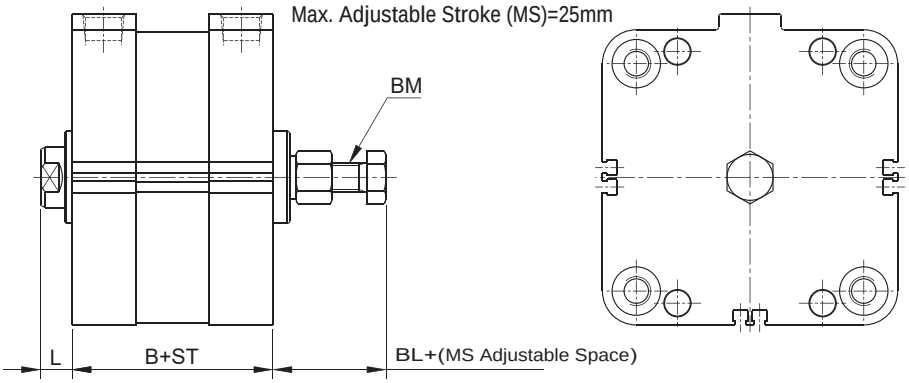

DJ2BY (Adjustable Single Rod Return Stroke with Guide)

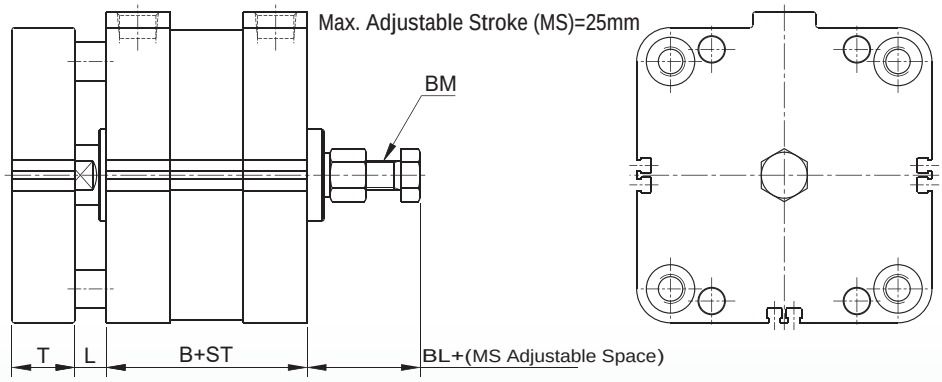

ST=Stroke Unit : mm

Bore Size \ Label	B1 Standard Type	B1 Magnetic Type	BL	BM	MS	T
ø12	17	24	25.5	M6×1.0	0~25 Separate order optional	8
ø16	18.5	25.5	25.5	M6×1.0		9.5
ø20	19.5	26.5	31.5	M8×1.25		11
ø25	22.5	29.5	31.5	M8×1.25		12
ø32	23	30	32	M10×1.5		14
ø40	29.5	29.5	36.5	M10×1.5		14
ø50	30.5	30.5	44	M12×1.75		17
ø63	36	36	42.5	M12×1.75		17
ø80	43.5	43.5	40	M12×1.75		24
ø100	53	53	36.5	M12×1.75		26

※ Refer to Standard Type for other dimensions.

DJ2T/M

HINAKA
HINAKA Fluid Power Co., Ltd
Scrupulosity, Specialty, Sincerity, Satisfactory

Feature Description：

Model: DJ2T
Tandem

Model: DJ2T..M
Tandem Magnetic

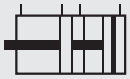

Model: DJ2M
Multi-Position Stroke

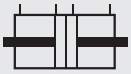

Model: DJ2M..M
Multi-position Stroke Magnetic

DJ2T (Tandem - Female/Male Threads)

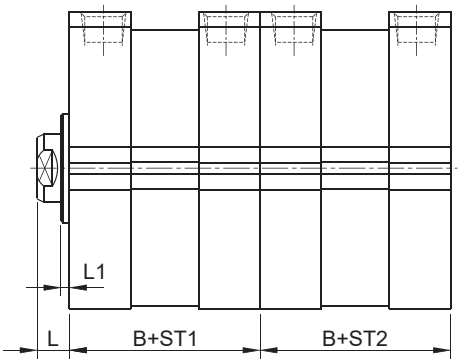

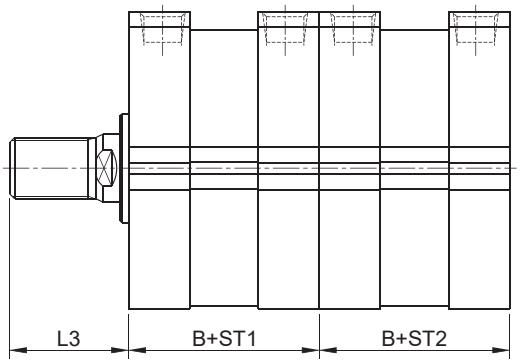

DJ2M (Multi-position - Female/Male Threads)

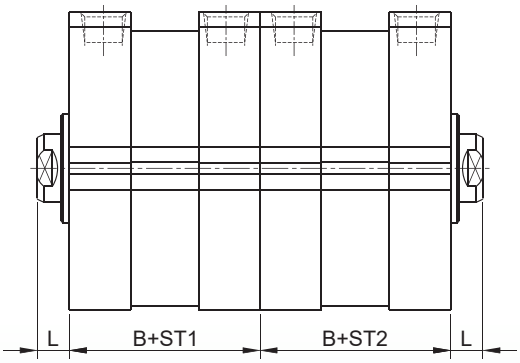

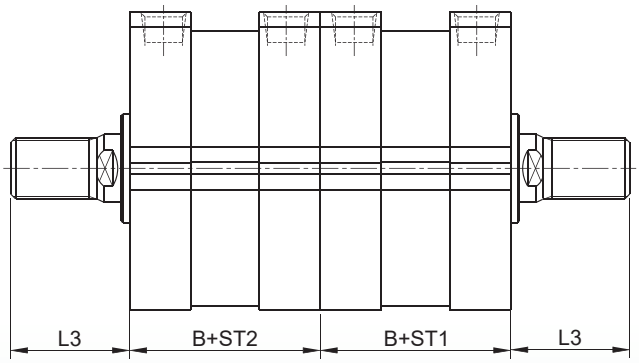

Unit : mm

Bore Size \ Label	B	
	Standard Type	Magnetic Type
ø12	17	24
ø16	18.5	25.5
ø20	19.5	26.5
ø25	22.5	29.5
ø32	23	30
ø40	29.5	29.5
ø50	30.5	30.5
ø63	36	36
ø80	43.5	43.5
ø100	53	53

※ Refer to Standard Type for other dimensions.
※ Ø80, Ø100 Multi-position stroke unavailable

DJ2 Large Bore Compact Cylinder

Feature Description：

Model: DJ2
Standard

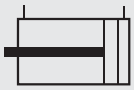

Model: DJ2..M
Standard Type Magnetic

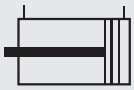

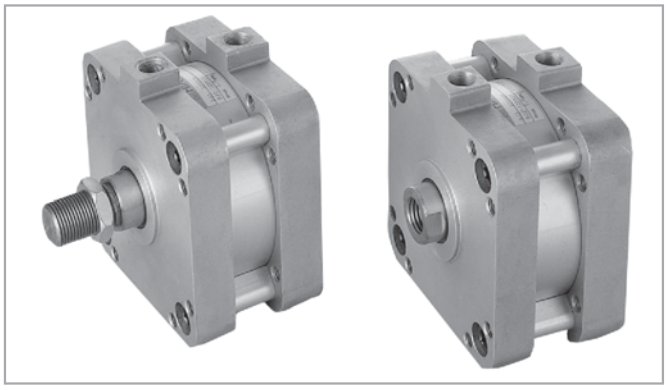

DJ2 (Large Bore Female Thread - F)

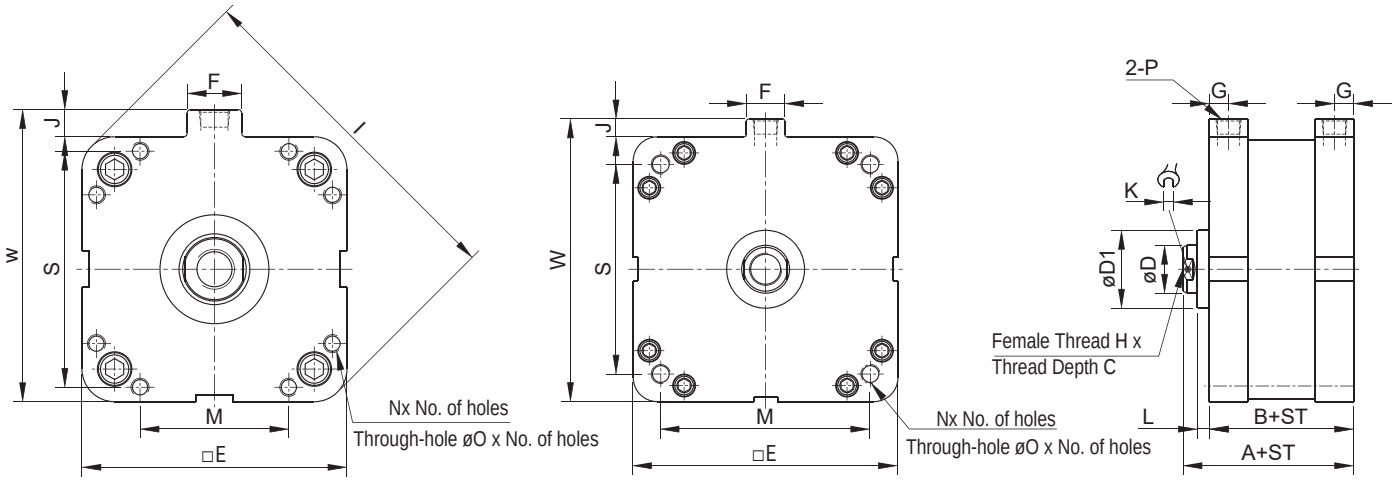

DJ2 (Large Bore Male Thread - E)

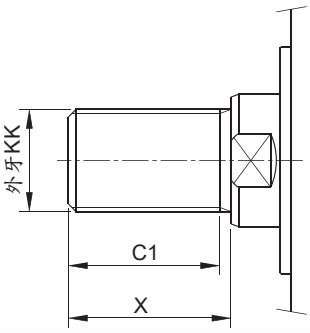

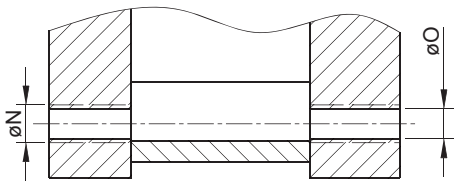

ST=Stroke Unit : mm

Label / Bore Size	A	B	øD	øD1	□E	F	G	H×C	I	J	K	L	M	P	W	S	KK	C1	X	Through-hole øO x No. of holes	Nx No. of holes
ø125	82	66	35	60	146	30	15	M22×2.5×33	190	15	32	3	82	PT3/8	161	130	M27×2	40	43	8.5×8	M10×1.5×8
ø160	82	66	35	60	180	35	15	M22×2.5×33	235	15	32	3	108	PT3/8	195	160	M27×2	40	43	8.5×8	M10×1.5×8
ø200	112	90	40	65	221	32	16	M27×2.0×40	296	15	36	10	175	PT1/2	236	175	M36×2	46	50	14×4	M16×2.0×4

DJ2D Large Bore Dual Rod Compact Cylinder

HINAKA
HINAKA Fluid Power Co., Ltd
Scrupulosity, Specialty, Sincerity, Satisfactory

Feature Description：

Model: DJ2D
Standard

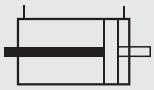

Model: DJ2D..M
Standard Type Magnetic

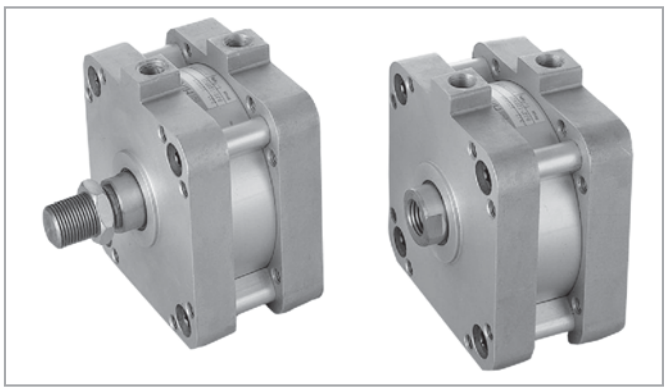

DJ2D (Large Bore Dual Rod Female Thread - F)

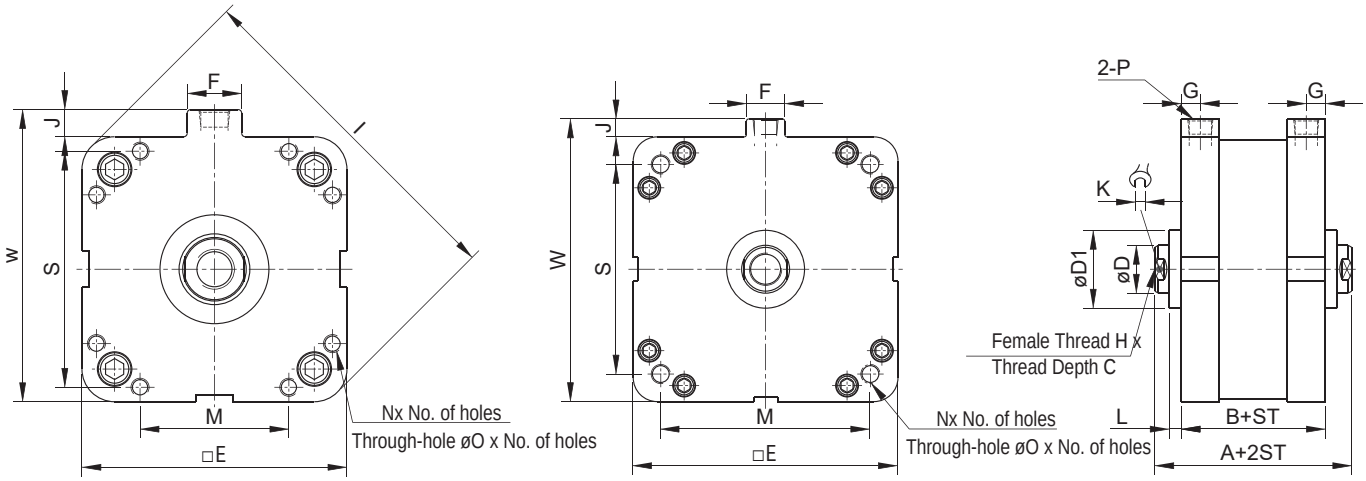

DJ2D (Large Bore Dual Rod Male Thread - E)

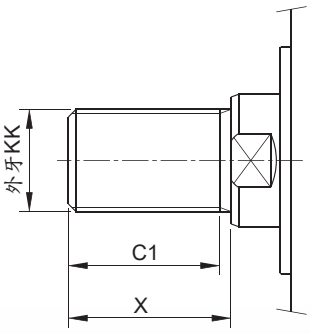

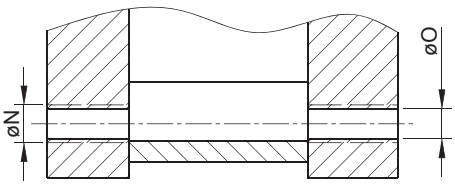

ST=Stroke Unit : mm

Label / Bore Size	A	B	øD	øD1	□E	F	G	H×C	I	J	K	L	M	P	W	S	KK	C1	X	Through-hole øO x No. of holes	Nx No. of holes
ø125	107	75	35	60	146	30	15	M22×2.5×33	192	15	32	3	82	PT3/8	161	130	M27×2	40	43	8.5×8	M10×1.8×8
ø160	107	75	35	60	180	35	13.5	M22×2.5×33	216	22	32	3	108	PT1/2	202	160	M27×2	40	43	8.5×8	M10×1.8×8
ø200	146	102	40	65	221	32	16	M27×2.0×40	296	15	36	10	175	PT1/2	236	175	M36×2	46	50	14×4	M16×2.0×4

DJ2 Large Bore Adjustable Dual Rod Cylinder

Feature Description：

Model: DJ2E

Adjustable Dual Rod Stroke

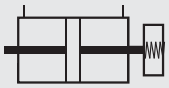

Model: DJ2E..M

Magnetic Adjustable Dual Rod Stroke

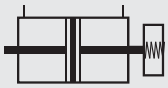

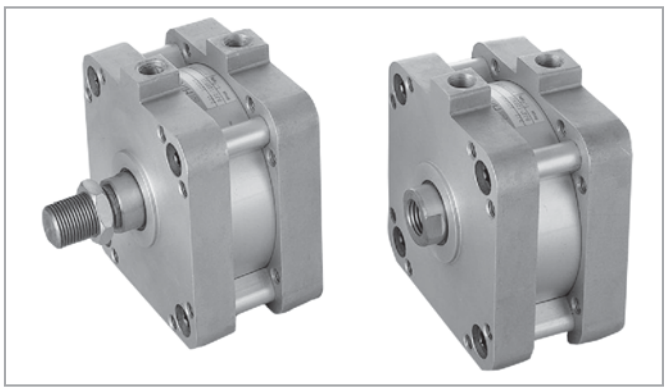

DJ2 (Large Bore Adjustable Dual Rod - Female Thread - F)

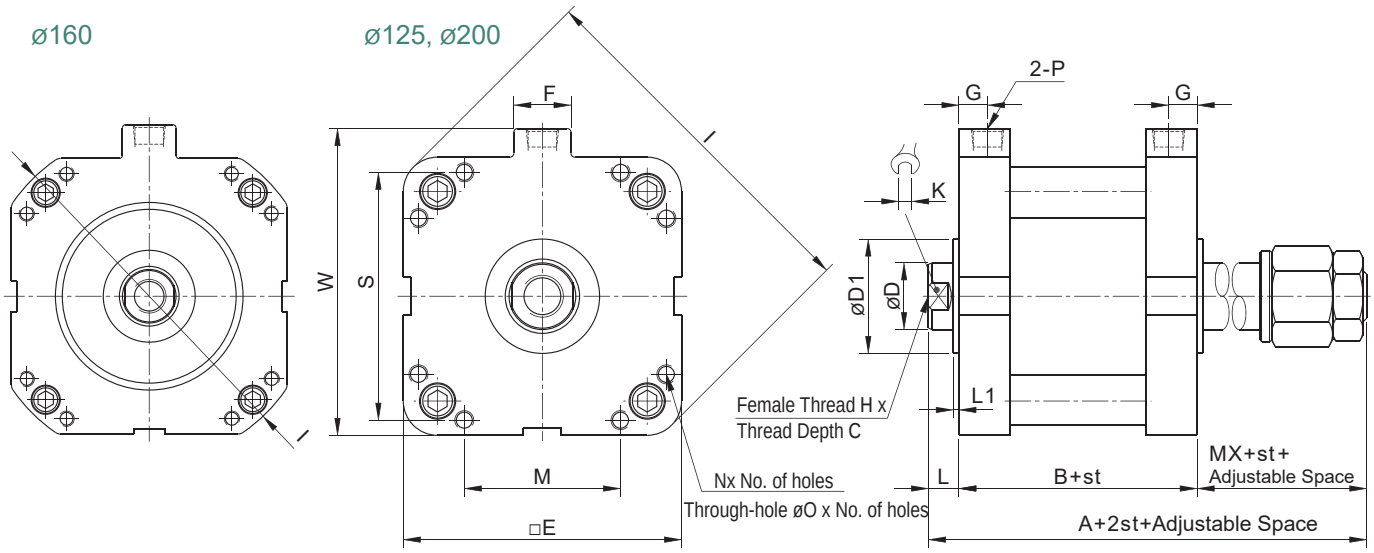

DJ2 (Large Bore Adjustable Dual Rod - Male Thread - E)

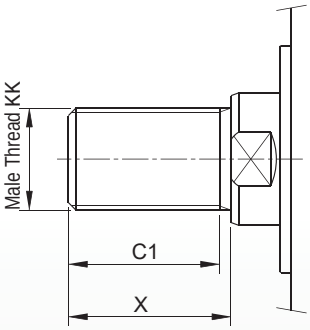

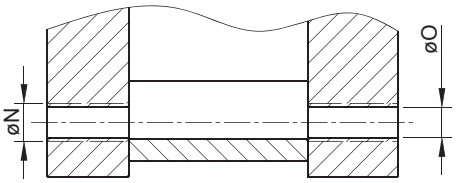

ST=Stroke Unit : mm

Label / Bore Size	A	B	MX	øD	øD1	□E	F	G	H×C	I	K	L	L1	M	P	W	S	KK	C1	X	Through-hole øO x No. of holes	Nx No. of holes
ø125	150	75	59	35	60	146	30	15	M22×2.5×33	190	32	16	3	82	PT3/8	161	130	M27×2	40	43	8.5×8	M10×1.8×8
ø160	170	75	79	35	60	180	30	13.5	M22×2.5×33	ø216	32	16	3	108	PT1/2	202	160	M27×2	40	43	8.5×8	M10×1.8×8
ø200	196	102	72	40	65	221	32	16	M27×2.0×40	296	36	22	10	175	PT1/2	236	175	M36×2	46	50	14×4	M16×2.0×4

FA/FB Type

Front Flange **DJ2** (Standard Type)
Rear Flange **DJ2..M** (Magnetic Type)
ø12~100 (Both female and male threads)

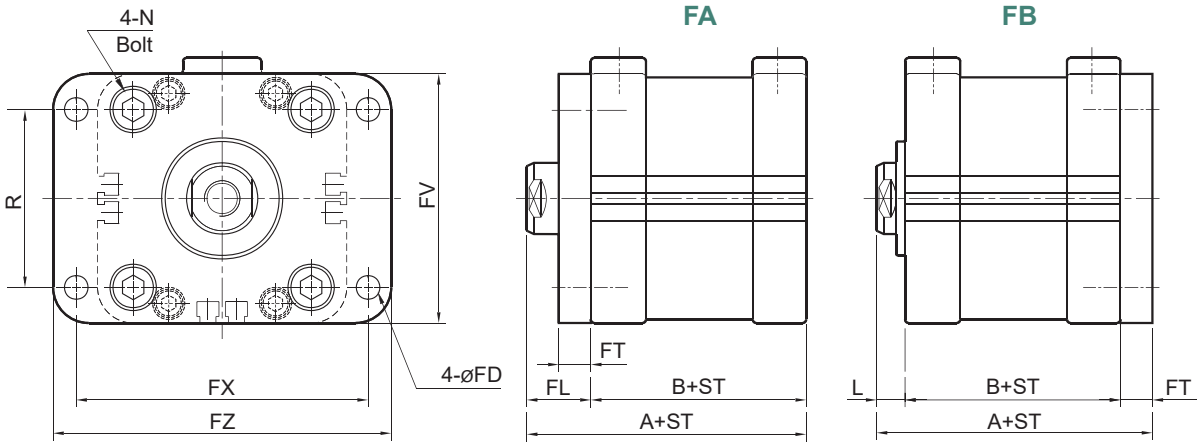

ST=Stroke Unit : mm

Label / Bore Size	A		B		FL	N	øFD	FT	FV	FX	FZ	R
	Standard Type	Magnetic Type	Standard Type	Magnetic Type								
ø12	28.5	35.5	17	24	11.5	M4×0.7	4.5	5.5	28	48	58	15.5
ø16	31	38	18.5	25.5	12.5	M4×0.7	4.5	5.5	33	48	58	20
ø20	34.5	41.5	19.5	26.5	15	M6×1.0	6.6	8	40	52	64	255
ø25	37.5	44.5	22.5	29.5	15	M6×1.0	6.6	8	44	56	68	28
ø32	39.5	46.5	23	30	16.5	M6×1.0	6.6	8	51	62	74	34
ø40	46	46	29.5	29.5	16.5	M6×1.0	6.6	8	59	72	84	40
ø50	49	49	30.5	30.5	18.5	M8×1.25	6.6	9	70	82	95	50
ø63	54.5	54.5	36	36	18.5	M10×1.5	9	9	83	98	110	60
ø80	67.5	67.5	43.5	43.5	24	M12×1.75	11	11	102	120	138	78
ø100	77	77	53	53	24	M12×1.75	11	11	122	140	158	94

LAType

Side Foot Mount **DJ2** (Standard Type) ø32~100
(Both female and male threads) **DJ2..M** (Magnetic Type)

LZType

Vertical Bar Mount **DJ2** (Standard Type) ø32~100
(Both female and male threads) **DJ2..M** (Magnetic Type)

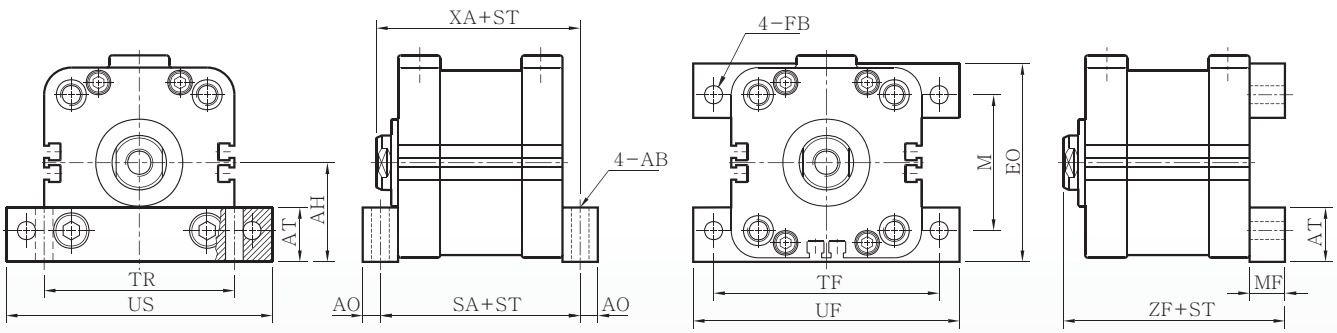

ST=Stroke Unit : mm

Label / Bore Size	SA		XA		ZF		øAB	AH	AO	AT	EO	øFB	MF	M	TF	TR	UF/US
	Standard Type	Magnetic Type	Standard Type	Magnetic Type	Standard Type	Magnetic Type											
ø32	35	42	57.5	57.5	43.5	50.5	5.5	26	6	18	52	5.5	12	34	62	52	74
ø40	42.5		59.5		51		5.5	30	6.5	20	60	5.5	13	40	70	58	82
ø50	43.5		66.5		53		6.5	36.5	6.5	20	73	6.5	13	50	83	70	98
ø63	52		73.5		61.5		9	42	8	24	84	9	16	60	99	82	114
ø80	59.5		89.5		72.5		9	51	8	24	102	9	16	77	119	100	134
ø100	71		105		84		11	61	9	28	122	11	18	94	140	122	158

DJ2 Mounting Accessories

CA/CB Type

Single Clevis Bracket **DJ2** (Standard) CA: ø12~100
Double Clevis Bracket **DJ2..M** (Magnetic) CB: ø32~100
(Both female and male threads)

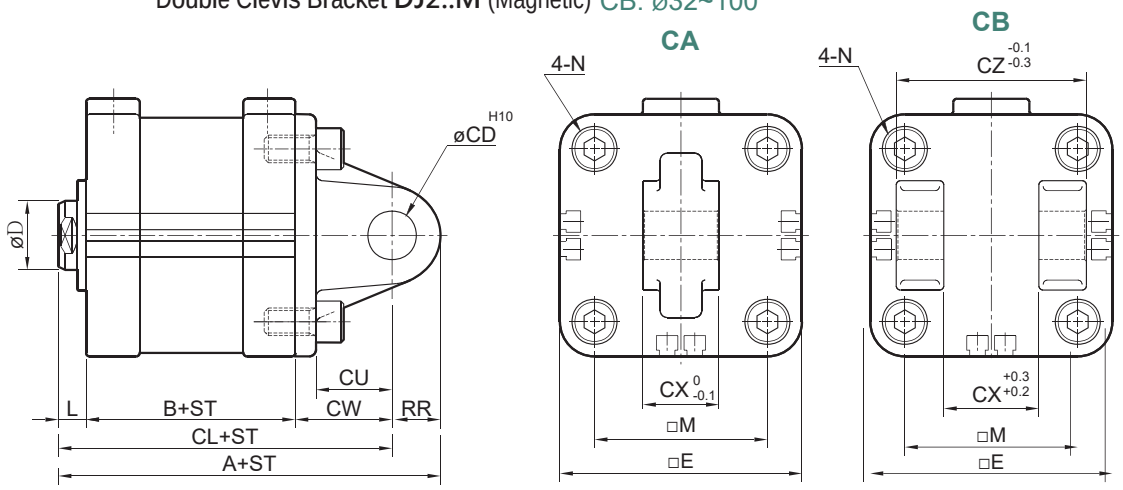

ST=Stroke Unit : mm

Label / Bore Size	A		CL		øCD	CU	CW	CX	CZ	RR
	Standard Type	Magnetic Type	Standard Type	Magnetic Type						
ø12	43	50	37	44	5	9	14	5	10	6
ø16	46.5	53.5	40.5	47.5	5	10	15	6.5	12	6
ø20	53.5	60.5	44.5	51.5	8	13	18	8	16	9
ø25	59.5	66.5	49.5	56.5	10	15	20	10	20	10
ø32	61.5	68.5	51.5	58.5	10	15	20	18	36	10
ø40	70		60		10	16	22	18	36	10
ø50	82		68		14	22	28	22	44	14
ø63	89.5		75.5		14	23	30	22	44	14
ø80	112.5		94.5		18	28	38	28	56	18
ø100	133		111		22	33	45	28	56	22

TI Type

Rear Bar Hinge **DJ2** (Standard)
DJ2..M (Magnetic Type)
ø12~100 (Both female and male threads)

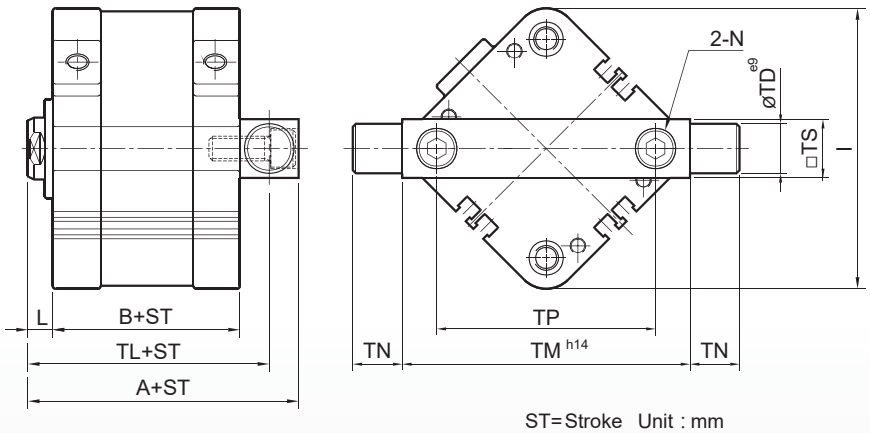

ST=Stroke Unit : mm

Label / Bore Size	A		TL		øTD e9	TM h14	TN	TP	□TS
	Standard Type	Magnetic Type	Standard Type	Magnetic Type					
ø12	32.52	39.52	27.76	34.76	6	36	6	21.92	9.52
ø16	35.02	42.02	30.26	37.26	6	43	6	28.28	9.52
ø20	39.2	46.2	32.85	39.85	8	52	8	36	12.7
ø25	42.2	49.2	35.85	42.82	8	58	8	39.59	12.7
ø32	47.37	54.37	39.43	46.43	12	67	12	48.07	15.87
ø40	57		47.5		16	78	16	56.56	19
ø50	59		49.5		16	93	16	70.7	19
ø63	67.5		56.5		20	110	20	84.84	22
ø80	81.9		69.2		20	135	20	108.87	25.4
ø100	91.4		78.7		25	163	25	132.9	25.4

IJoint ø12~100

ø12~ø25

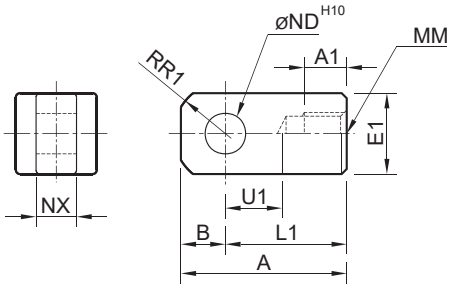

ø32~ø100

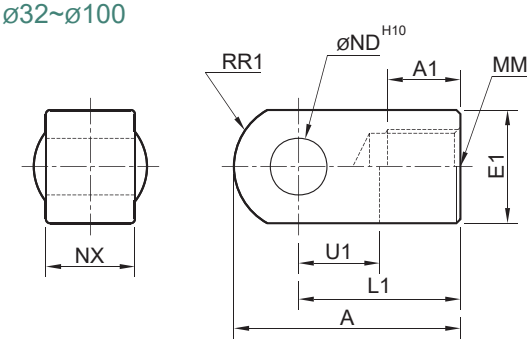

Unit : mm

Label / Bore Size	A	A1	E1	L1	M	RR1	U1	øND	NX
ø12	21.5	6	10	16	M5×0.8	6.3	7	5	5
ø16	32	8	12	25	M6×1.0	8.1	14	5	6.5
ø20	34	8.5	16	25	M8×1.25	10.3	11.5	8	8
ø25	41	10.5	20	30	M10×1.25	12.8	14	10	10
ø32	42	14	22	30	M14×1.5	12	14	10	18
ø40	42	14	22	30	M14×1.5	12	14	10	18
ø50	56	18	28	40	M18×1.5	16	20	14	22
ø63	56	18	28	40	M18×1.5	16	20	14	22
ø80	71	21	38	50	M22×1.5	21	27	18	28
ø100	71	21	38	50	M22×1.5	21	27	22	28

YJoint ø12~100

ø12~ø25

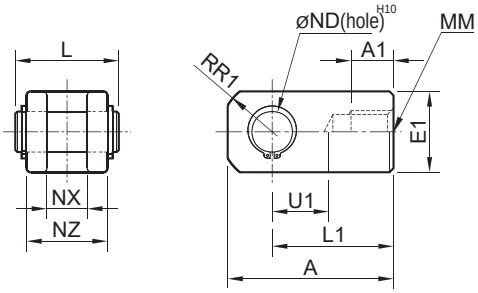

ø32~ø100

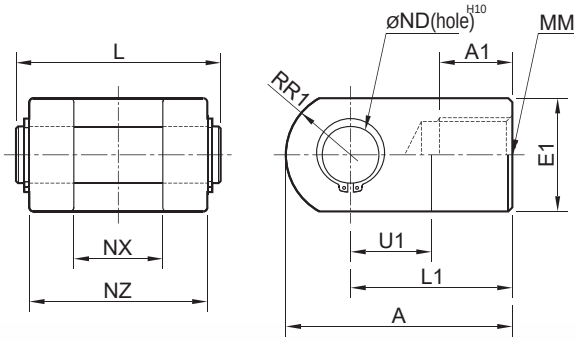

Unit : mm

Label / Bore Size	A	A1	E1	L1	M	RR1	U1	øND	NX	NZ	L
ø12	21.5	6	□10	16	M5×0.8	6.3	7	5	5	10	14.6
ø16	32	8	□12	25	M6×1.0	8.1	14	5	6.5	12	16.6
ø20	34	8.5	□16	25	M8×1.25	10.3	11.5	8	8	16	21
ø25	41	10.5	□20	30	M10×1.25	12.8	14	10	10	20	25.6
ø32	42	14	ø22	30	M14×1.5	12	14	10	18	36	41.6
ø40	42	14	ø22	30	M14×1.5	12	14	10	18	36	41.6
ø50	56	18	ø28	40	M18×1.5	16	20	14	22	44	50.6
ø63	56	18	ø28	40	M18×1.5	16	20	14	22	44	50.6
ø80	71	21	ø38	50	M22×1.5	21	27	18	28	56	64
ø100	71	21	ø38	50	M22×1.5	21	27	22	28	56	64