1 Pneumatic drives

ISO Standard

◎ISO 6432 / **DI**

HINAKA

DI Ordering Guidelines

Ordering Guidelines

D I D - 32 - M 50 PPV - LB - Y - G48R 2

1. Function

D	(Double Acting)
SR	(Rear Single Acting)

2. ISO 6432 International Standard

Bore ø12~ø25 (ø32~ø40 are customized specifications, not ISO standard)

3. Pneumatic Cylinder Models

A Stud-End Standard Model	**DO** Hollow Double Rod
C Integrated Clevis Standard Model	**M** Muti Stroke Positions Double Rods
D Double Rod	**TA** Stub-End Tandem Double Force Cylinder
DE Adjustable Double Rod	**TC** Integrated Clevis Tandem Double Force Cylinder
	A-C Stub-End, Expanded Cushioning
	C-C Integrated Clevis, Tandem, Amplified Force Cylinder

4. Pneumatic Cylinder Bore Size

5. Sensor Device

M: With Magnet / **N**:Without Magnet

6. Stroke (ST)

7. Adjustable End Cushions

PPV: Both Ends / **FPPV**: Front / **RPPV**: Rear

8. Mountings

FA	**TC**
CB	**LB**

9. Rod End Accessories

Y	**L**
P	**F**
T	

10. Sensor Type

(Please refer to Section 8 under "Accessories/Sensor Devices")

11. Number of Sensors

DI Internal Structure

Internal Structure：

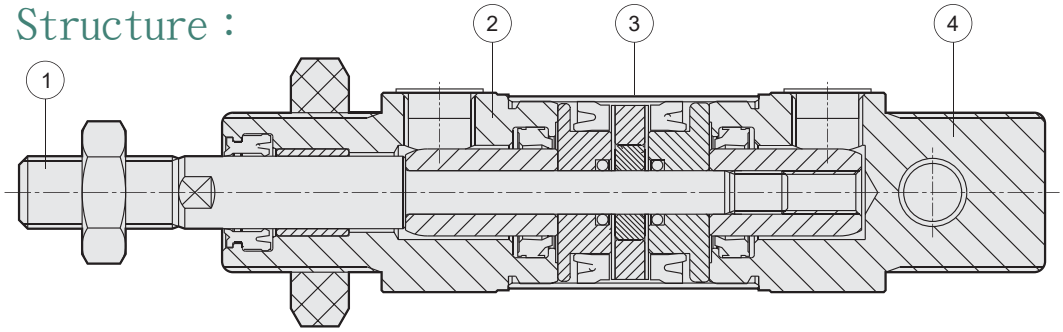

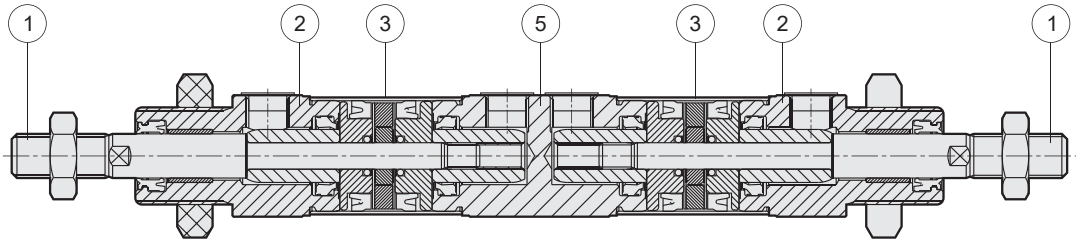

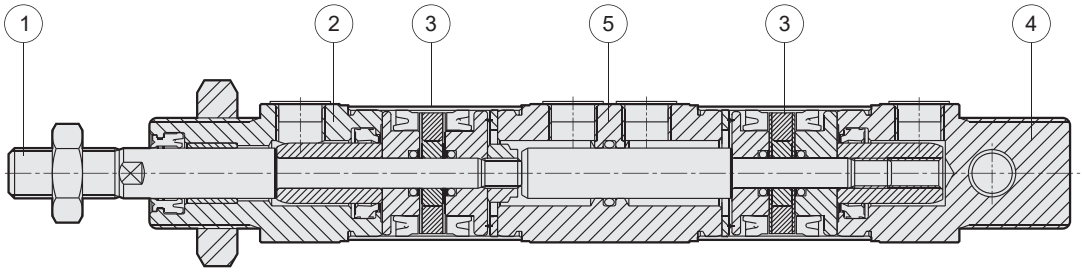

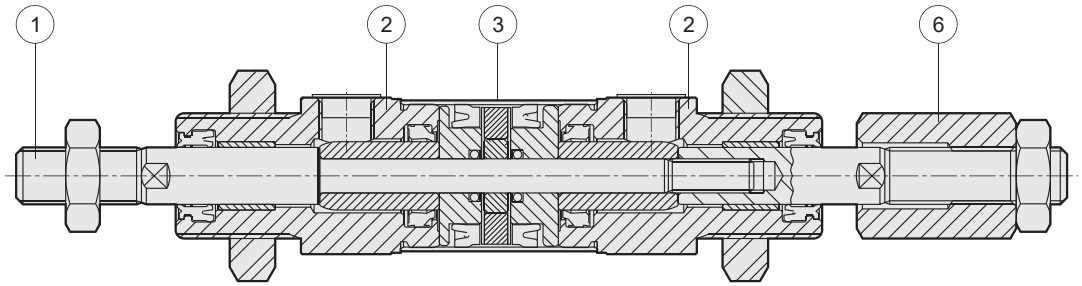

Components：

Item	Part Name	Material	Item	Part Name	Material
1	Piston Rod	Mecum Carbon Steel S45C	5	Center Cap	Aluminum Alloy AA6063
2	Front Cap	Aluminum Alloy AA6063	6	Adjustable Nut	Structural Steel SS400
3	Cylinder Tube	Stainless Steel SUS304		Seal	Nitrile Rubber NBR
4	Rear Cap	Aluminum Alloy AA6063			

Applicable Conditions：Compliant with ISO 6432 international standard

Bore Size ø	Function	Working Fluid	Temperature Range	Operating Speed Range	Operating Oil	Proof Pressure	Maximum Operating Pressure	Minimum Operating Pressure
12 16	Double Acting / Single Acting	Filtered Compressed Air	0°C~60°C	500mm/s	Not Necessary	1MPa (10.2kgf/cm²)	0.7MPa (7.1kgf/cm²)	0.06MPa (0.612kgf/cm²)
20 25						1.3MPa (13.26kgf/cm²)	1MPa (10.2kgf/cm²)	0.1MPa (1.02kgf/cm²)

DI

Feature Description：

- DI series with bore diameters within ø12- ø25 meet ISO6432 standard; ø32 and ø40 are customized specifications.
- Equipped with adjustable cushions to absorb dynamic energy, eliminate vibration and improve operational efficiency.
- Magnetic ring installed as standard.
- The front and rear covers are riveted for excellent air tightness and concentricity.
- Cylinder tube (bore) is SUS304 grade stainless steel, sleek in appearance, lightweight, very good thermal dissipation and corrosion resistant.
- Various mounting accessories available for easy installation.

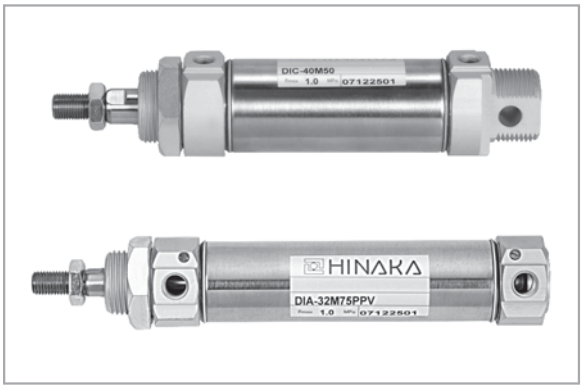

Model：DIC,DIA
Function：

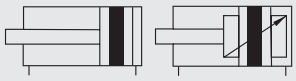

Limiting Conditions：
Cushions for bore Ø20~Ø40

Model：SRIC,SRIA
Function：

Limiting Conditions：
Stroke 10~50mm

DIA (Standard Stud End)

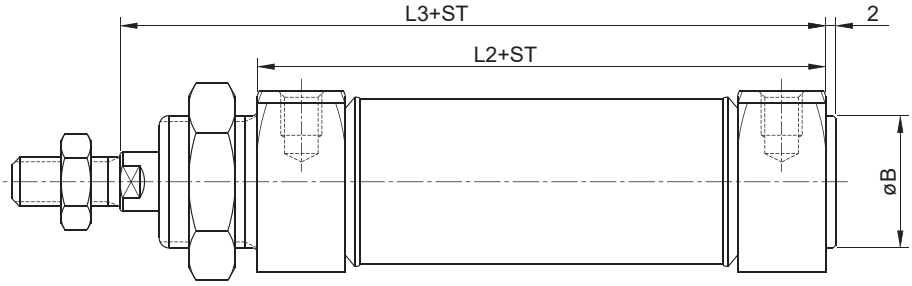

DIC (Standard Integrated Clevis)

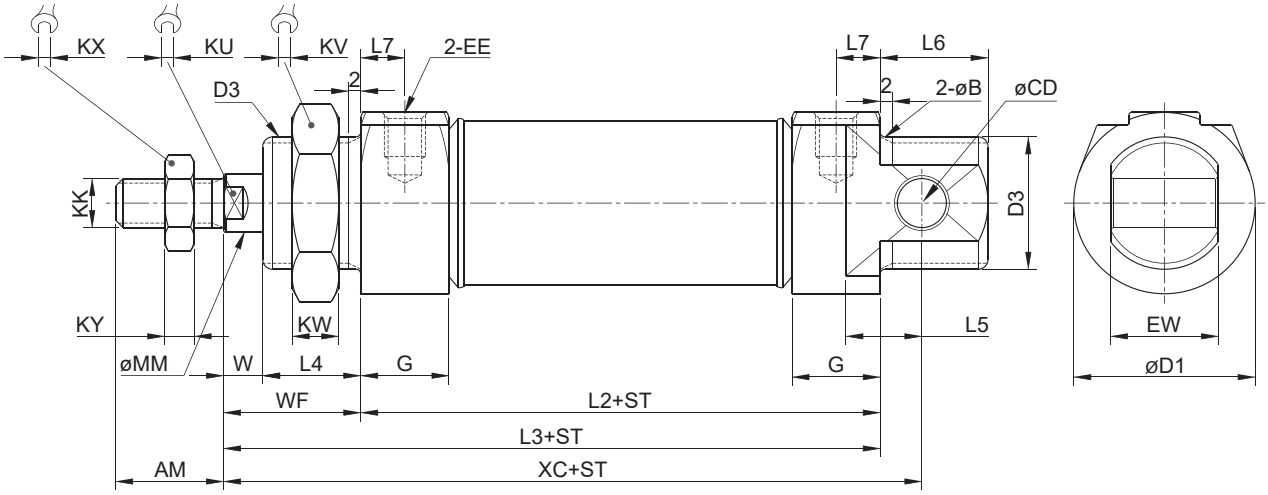

ST=Stroke Unit：mm

Label / Bore Size	AM	D1	øCD	D3	WF	L2	L3	L4	L5	L6	L7	KK	KU	KV	KW	KX	KY	øMM	W	EW	XC	EE	G	øB
ø12	16	20	6	M16×1.5	22	45	67	17	9	17	4.5	M6×1	-	24	8	10	5	6	5	12	75	M5×0.8	9	16
ø16	16	20	6	M16×1.5	22	52	73	17	9	17	5	M6×1	-	24	8	10	5	6	5	12	82	M5×0.8	10	16
ø20	20	27.5	8	M22×1.5	24	67.5	91.5	20	12	20	7.6	M8×1.25	7	32	8	12	6	8	4	16	95	G1/8	15.25	22
ø25	22	27.5	8	M22×1.5	28	69.5	97.5	22	12	22	8	M10×1.25	9	32	8	17	6	10	6	16	104	G1/8	16	22
◎ ø32	22	37	10	M27×2.0	28	83	111	20	13.5	22	9	M10×1.25	10	35	9.5	17	6	12	8	22	119.5	G1/8	18	27
◎ ø40	24	45	10	M33×2.0	31	85	116	20	13.5	22	9	M12×1.25	14	41	9.5	22	8	16	11	26	124.5	G1/8	18	33

◎Mark indicates customized specifications, not ISO Standard.

Feature Description：

- Riveted piston rod and body to provide high concentricity and low friction.
- Sensors and adjustable cushions optional.
- Forward stroke of the adjustable model can be modified for precision accuracy.

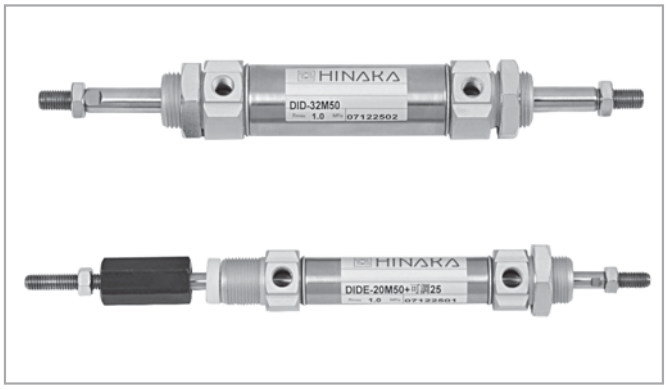

Model：DID

Function：

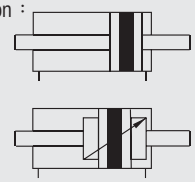

Model：DIDE

Function：

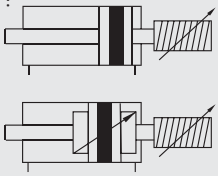

Limiting Conditions : Cushions for bore Ø20~Ø40

DID (Double Rod)

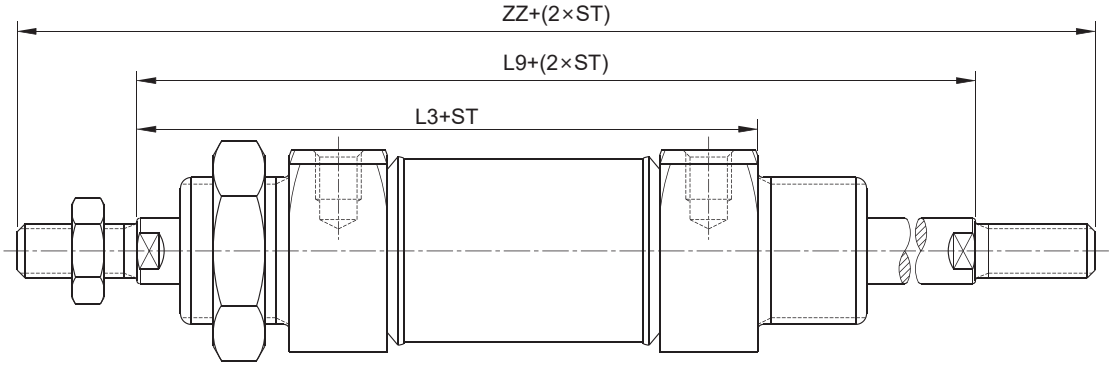

DIDE (Adjustable Double Rod)

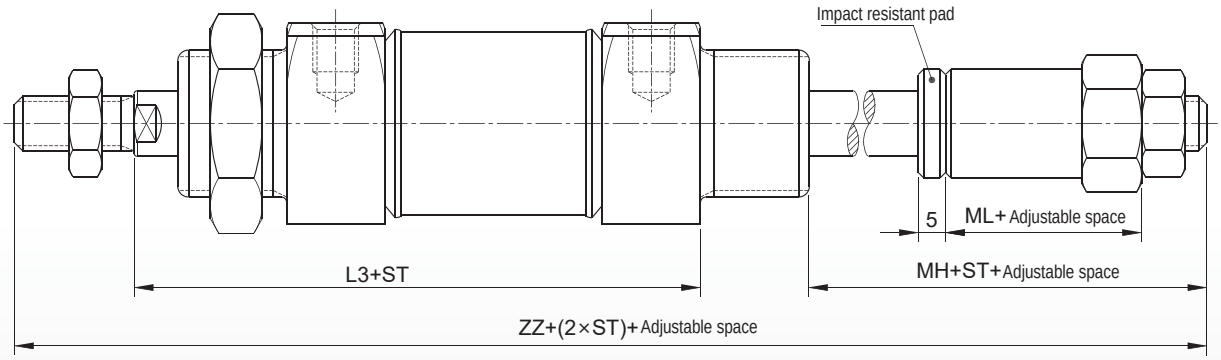

ST=Stroke Unit：mm

Bore Size \ Label	L3	L9	ZZ	MH	ML	Adjustable space
ø16	73	96	128	21	10	25/50
ø20	91.5	115.5	155.5	24	14	
ø25	97.5	126	170	28	16	
◎ ø32	111	138	182	32	18	
◎ ø40	116	147	195	35	20	

◎ Mark indicates customized specifications, not ISO Standard.
※ Refer to Standard Type for other dimensions.

DIDO

Model : DIDO

Function :

Limiting Conditions : 1. Stroke 30~100mm

2. Equipped with a built-in shock absorber, (cushions not adjustable)

Applications

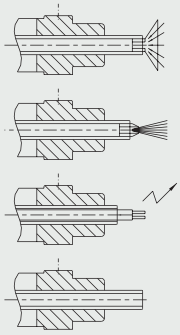

- Vacuum tubing for suction cups.
- Air spray nozzle for compressed air jetting, blow-off, and cleaning.
- Fluid spray nozzle for liquid supply - bonding, rinsing, filling, and cooling.
- Internal wiring for electrical wires.
- Designed to install specialized tooling — claws / attachments / fixtures / other designs

Feature Description：

- For use with vacuum pads or other devices.
- Vacuum pads or other devices can be installed directly onto rod end eliminating tube or pipe failure.
- Magnetic ring optional.

DIDO (Hollow Double Rod)

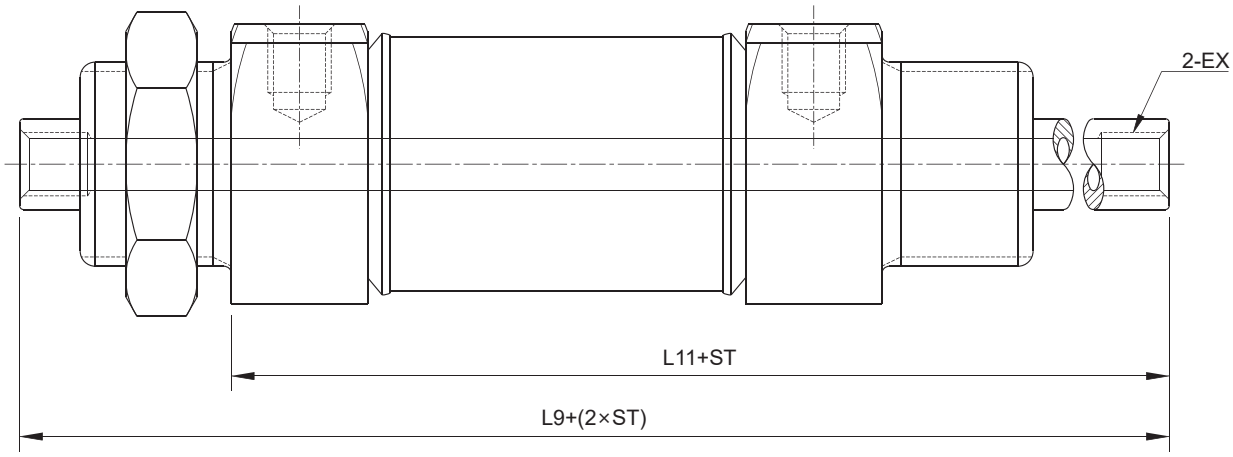

ST=Stroke Unit : mm

Label / Bore Size	EX	L9	L11
ø25	M5×0.8×20 Depth	125.5	98
◎ ø32	PT 1/8	139	108
◎ ø40	PT 1/8	147	116

◎ Mark indicates customized specifications, not ISO Standard.
※ Refer to Standard Type for other dimensions.

Model : DIDM

Function :

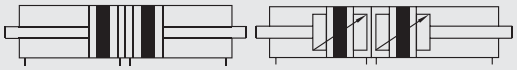

Four Position Operating Instructions

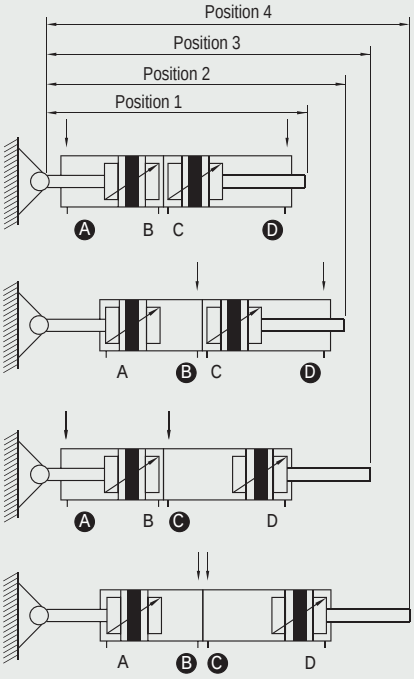

Limiting Conditions :

1. For four positions both strokes must be DIFFERENT.
2. For three positions both strokes must be the SAME.

Feature Description :

- The Multi-Stroke Pneumatic Cylinder has two double action pistons and piston rods.
- Four endpoint locations used in positioning, feeding, quantitative filling left and right displacement, flow control, etc. and other structural designs.
- Magnetic ring and adjustable cushions optional.

DIDM (Multi-Stroke Position Double Rod)

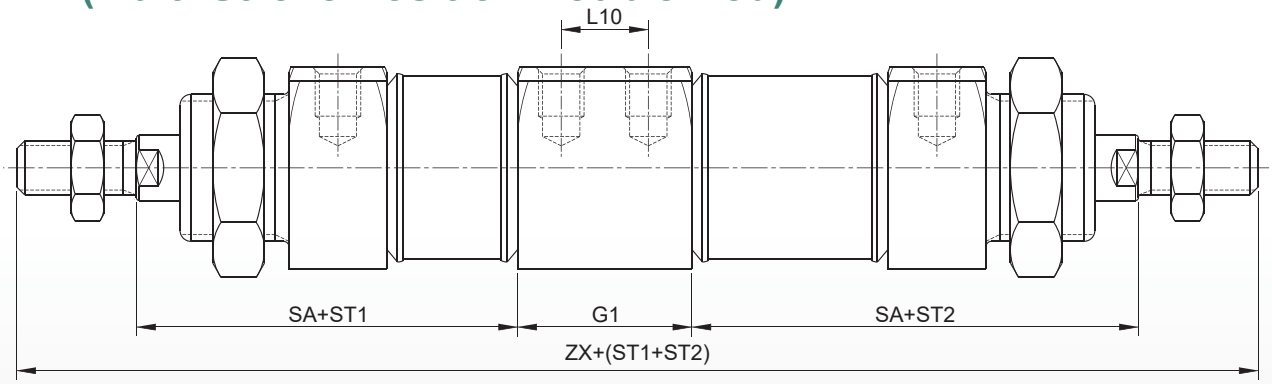

ST=Stroke Unit : mm

	Label / Bore Size	SA	G1	L10	ZX
	ø20	76.25	30.5	15.3	223
	ø25	81.5	32	16	239
◎	ø32	95	36	20	266
◎	ø40	98	36	20	280

◎ Mark indicates customized specifications, not ISO Standard.
※ Refer to Standard Type for other dimensions.

DITA/TC

Model : DITC DITA

Function :

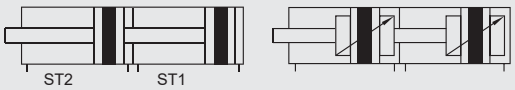

Double Force Operation Instructions

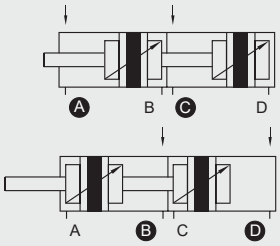

Limiting Conditions:

1.Two strokes (ST1, ST2) must be the SAME length.

2.Double output force, then back to single output force.

Three Position Operation Instructions

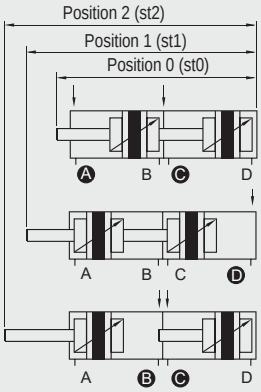

Limiting Conditions:

When ordering please use the following sequence.

DITA - 20N20 + 20N50

ST1 ST2 (Including Stroke ST1)

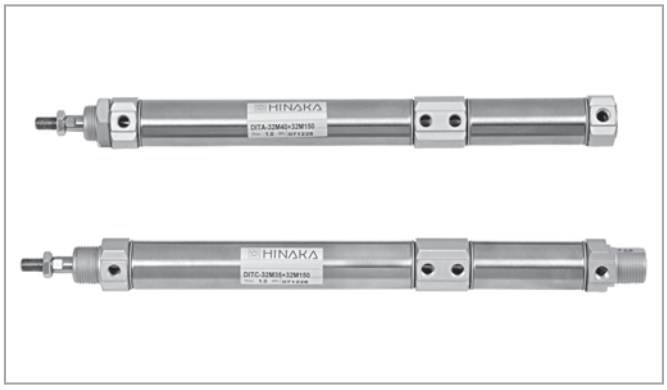

Feature Description :

- Tandem connection with two pistons and one rod.
- Three positions can be used for fixed, feeding, moving, flow control applications, etc.
- Double output force design.
- Magnetic ring and adjustable cushions optional.

DITA (Stud-End Tandem Double Force Cylinder)

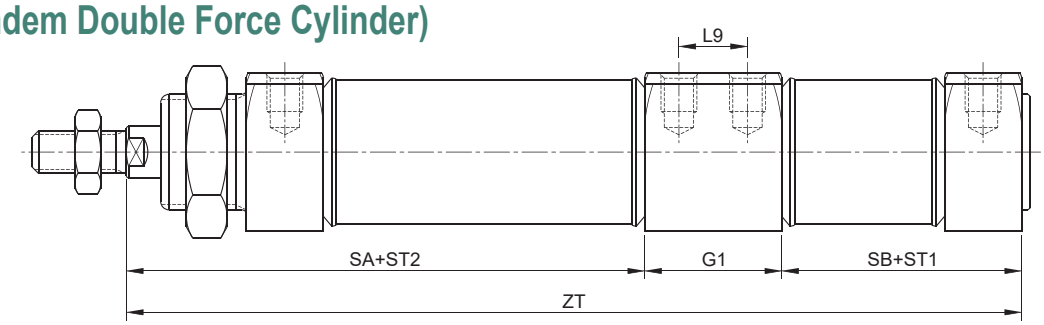

DITC (Integrated Clevis Tandem Double Force Cylinder)

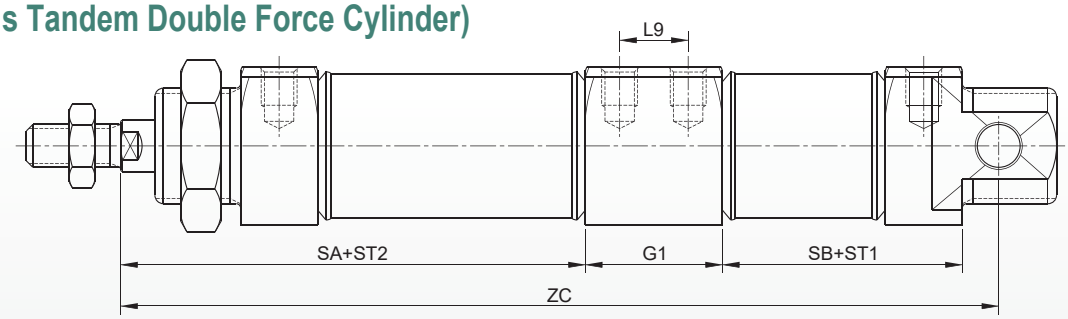

ST= Stroke Unit : mm

Bore Size \ Label	SB	ZC	ZT
ø20	52.25	162.5	159
ø25	53.5	173.5	167
◎ ø32	65	202.5	194
◎ ø40	67	209.5	201

◎ Mark indicates customized specifications, not ISO Standard.
※ Refer to Standard Type for other dimensions.

Feature Description：

- This version has extended cushions up to 60mm at both ends.
- Suitable for high speed mechanisms and can be used to replace external hydraulic buffers.

Model：DIC-C DIA-C

Function：

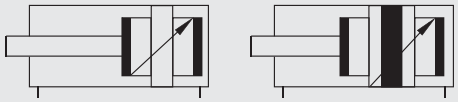

Limiting Condition：Cushions for ø20-ø40.
Suggested for the strokes over 150mm

DIA-C (Stud-End, Extended Cushioning)

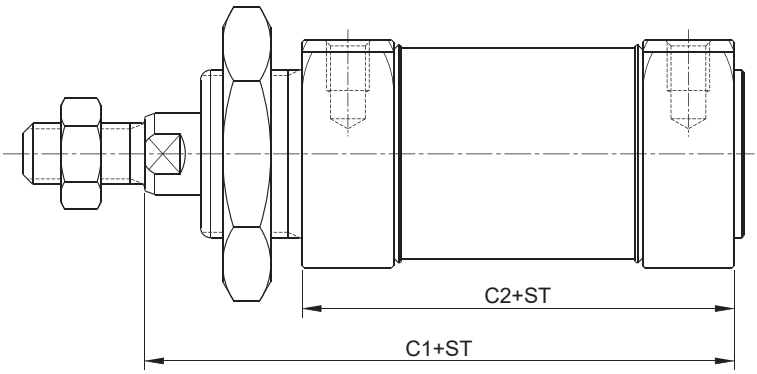

DIC-C (Integrated Clevis, Extended Cushioning)

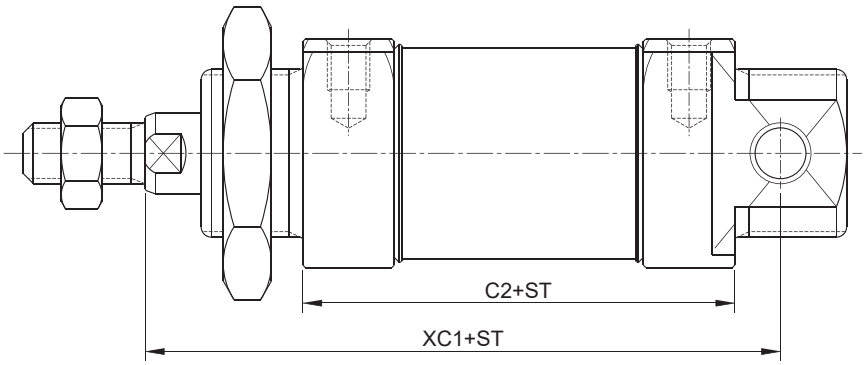

ST=Stroke Unit：mm

Label / Bore Size	C1		C2		XC1	
	Front and Rear Lengthened Buffer Size	Single End Lengthed Buffer Size	Front and Rear Lengthened Buffer Size	Single End Lengthed Buffer Size	Front and Rear Lengthened Buffer Size	Single End Lengthed Buffer Size
ø20	175.5	133.5	151.5	109.5	159	137
ø25	175.5	136.5	147.5	108.5	182	143
◎ ø32	187.5	140	159.5	121	195.5	157.5
◎ ø40	188	152	157	121	196.5	160.5

◎ Mark indicates customized specifications, not ISO Standard.
※ Refer to Standard Type for other dimensions.

LB Type

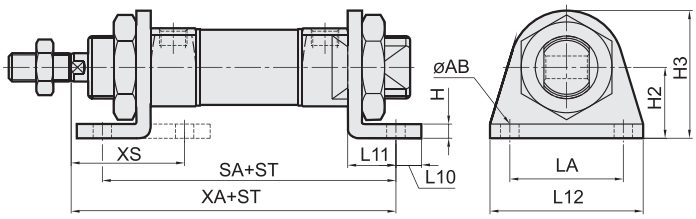

ST= Stroke Unit : mm

Label / Bore Size	L10	L11	L12	LA	H	H2	H3	øAB	SA	XA	XS
ø12	6.5	14	42	32	3	20	33	5.5	73	81	33
ø16	6.5	14	42	32	3	20	33	5.5	80	87	32
ø20	9	17	54	40	3	25	45	6.5	101.5	108.5	38
ø25	9	17	54	40	3	25	45	6.5	103.5	114.5	42
◎ ø32	7	18	64	50	3	28	48	7	119	129	43
◎ ø40	10	20	74	54	4	31.5	60	7	125	136	47

◎ Mark indicates customized specifications, not ISO Standard.

FA Type (Front Fixed)
FB Type (Rear Fixed)

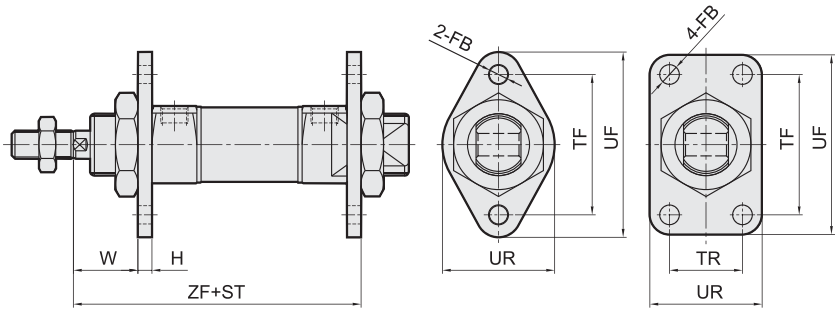

ST= Stroke Unit : mm

Label / Bore Size	W	H	ZF	TF	TR	UF	UR	øFB
ø12	19	3	70	40	—	52	30	5.5
ø16	19	3	77	40	—	53	30	5.5
ø20	21	3	94.5	50	—	66	40	6.5
ø25	25	3	100.5	50	—	66	40	6.5
◎ ø32	25	3	114	50	26	64	40	7
◎ ø40	27	4	120	54	30	74	50	7

◎ Mark indicates customized specifications, not ISO Standard.

CB Type

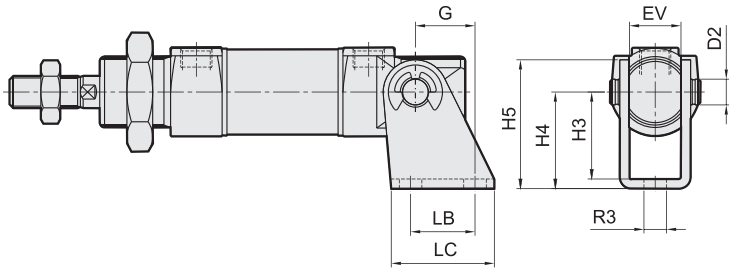

Unit : mm

Label / Bore Size	LB	LC	EV	H3	H4	H5	G	øD2	øR3
ø12	15	25	12	24	$27^{+0.3}_{-0.2}$	34	15	6	5.5
ø16	15	25	12	24	$27^{+0.3}_{-0.2}$	34	15	6	5.5
ø20	20	32	16	27	$30^{+0.4}_{-0.2}$	40	18.5	8	7
ø25	20	32	16	27	$30^{+0.4}_{-0.2}$	40	18.5	8	7
◎ ø32	25	40	22	37	$40^{+0.5}_{-0.2}$	53	22.5	10	9
◎ ø40	25	40	26	37	$40^{+0.5}_{-0.2}$	53	22.5	10	9

◎ Mark indicates customized specifications, not ISO Standard.

TC Type

Front Mounting (TA)
Rear Mounting (TC)

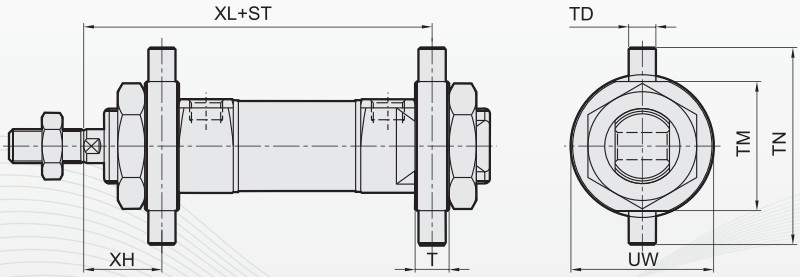

ST= Stroke Unit : mm

Label / Bore Size	TN	TM	øTD	øUW	T	XL	XH
ø20	58	38	8	42	10	96.5	19
ø25	58	38	8	42	10	102.5	23
◎ ø32	60	40	10	45	12	117	22
◎ ø40	72	48	10	50	12	122	25

◎ Mark indicates customized specifications, not ISO Standard.

Y Joint

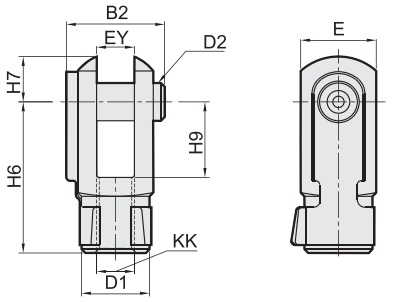

Unit : mm

Label / Bore Size	H6	H7	H9	øD2	EY	E	KK	B2	øD1
ø12, ø16	24	7	12	6	6 B13	12	M6	16	10
ø20	32	10	16	8	8 B13	16	M8	21.5	14
ø25	40	12	20	10	10 B13	20	M10×1.25	26	18
◎ ø32	40	12	20	10	10 B13	20	M10×1.25	26	18
◎ ø40	48	14	24	12	12 +0.7/+0.15	24	M12×1.25	32	20

◎ Mark indicates customized specifications, not ISO Standard.

P Type Fish Eye

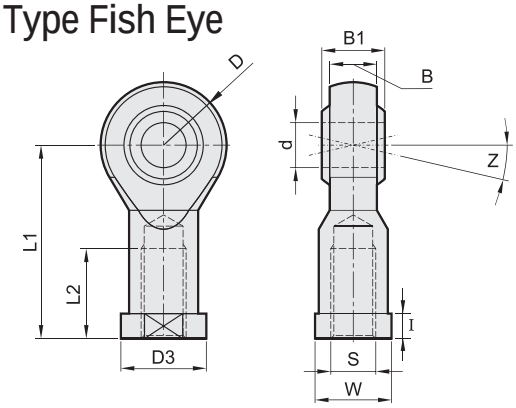

Unit : mm

Label / Bore Size	ød H7	S	øD	B	B1	L1	L2	W	øD3	I	Z°
PHS 6	6	M6×1.0	9	6.8	9	30	12	11	13	5	13
PHS 8	8	M8×1.25	11	9	12	36	16	14	16	5	13
PHS 10	10	M10×1.25	13	10.5	14	43	20	17	19	6.5	13
PHS 12	12	M12×1.25	15	12	16	50	22	19	22	6.5	13

T Type Float Joint

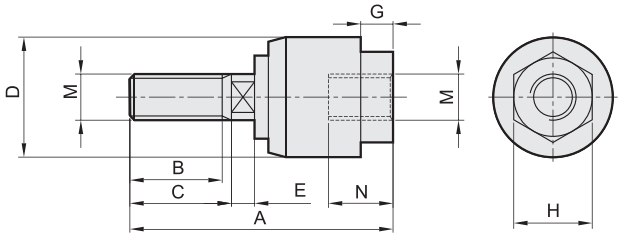

Unit : mm

Label / Bore Size	M	A	B	C	E	N	øD	G	H
KG-1006T	M6×1.0	38	15	18	3	7	18	5	11
KG-1008T	M8×1.25	50	18	20	4	8	24	7	13
KG-1010T	M10×1.25	58	20	22	5	9	26	8	17
KG-1012T	M12×1.25	58	20	22	5	9	28	8	17

L Type Flange Floating Joint

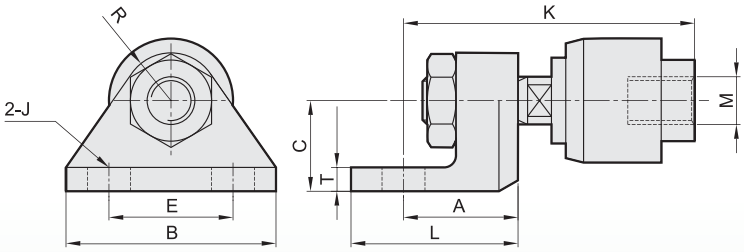

Unit : mm

Label / Bore Size	M	A	L	B	E	øJ	C	K	T	R
KG-1008L	M8×1.25	19	29	44	26	9	15	51	4	9
KG-1010L	M10×1.25	24	35	44	26	9	19	62	5	10
KG-1012L	M12×1.25	24	35	44	26	9	19	62	5	10

Refer to T Type Foot Floating Joint for other dimensions.

F Type Float Joint

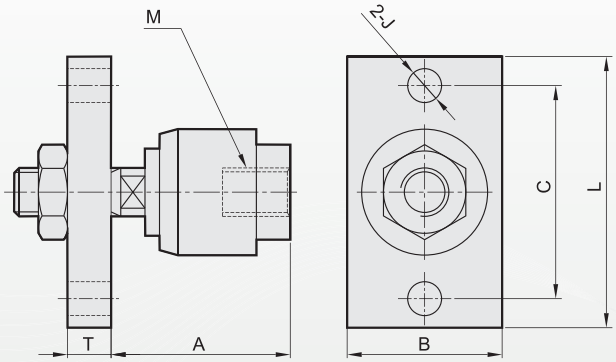

單位 : mm

代號 / 缸徑	M	A	T	B	øJ	C	L
KG-1008F	M8×1.25	32	6	25	7	40	52
KG-1010F	M10×1.25	38	9	32	7	44	56
KG-1012F	M12×1.25	38	9	32	7	44	56

Refer to T Type Foot Floating Joint for other dimensions.