4 Power Components for Machining Centers

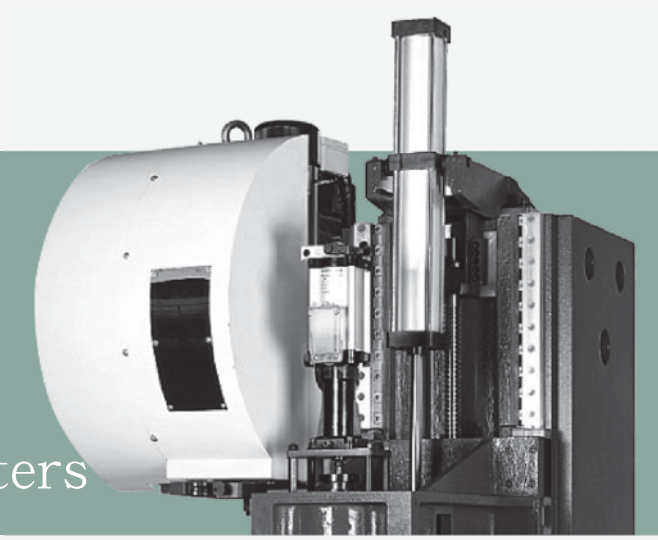

Z-Axis Counterbalance Series

Patent protected, violators will be prosecuted

◎Pneumatic Counterbalance Cylinder / **ZBDAL**

◎Hydraulic Counterbalance Cylinder / **ZBBAL**

◎Air-Oil Counterbalance Cylinder / **ZBBA1 & ZBBA2**

◎Air Supply Loading Module / **ZBBAS**

HINAKA

ZBDAL / ZBBAL Ordering Guidelines

Ordering Guidelines

ZB DAL - 100× 650 TC - T

1. Z-Axis Counterbalance Series

2. Type

DAL: Pneumatic Counterbalance
BAL: Hydraulic Counterbalance
BA1: Single Stroke Air-Oil Counterbalance
BA2: Double Stroke Air-Oil Counterbalance

3. Bore Size

DAL: Ø100
BAL: Ø40、Ø50
BA1 / **BA2**: Ø90、Ø100

4. Total Stroke

5. Installation Type

TC / **FA** / **FB** / **FAB**

6. Piston Rod Accessories

T: Floating Joint
P: Fisheye Joint
F: Floating Joint Flange Type

※BA2 Double Stroke Counterbalance Cylinder Order Example：
ZB BA2-100×350+90×300FAB
First-Stage Bore Size×Stroke+Second-Stage Bore Size×Stroke

ZBDAL Pneumatic Counterbalance Cylinder Feature Description：

ZBDAL

- Simpler construction than hydraulic counterbalance system.
- The pneumatic compression ratio is much greater than the hydraulic compression ratio; when the Z axis operates at high speeds air flow won't cause overheating or friction, which is ideal for high speed machining.
- Gas boosting pump utilizes air as a medium to replenish gas at any time in the counterbalance system. No difficulties due to nitrogen counter weight system unable to replenish at any time because of leakage or wear and tear. No regulations or handling restrictions for high pressure storage containers. Low operation and maintenance costs.
- Using the TC attachment, designing counterbalance cylinder fulcrum can be done according to the Z axis column and box size to determine the size of L1 and L2. Shortens cylinder protrusion.
- Floating joint and flange connector design can compensate for installation error.
- Careful selection of the most suitable seals increases service life of counterbalance cylinders.

ZBBAL

ZBBAL Hydraulic Counterbalance Cylinder Feature Description：

- Hydraulic counterbalance double cylinder installation method on both sides of the Z axis, no spindle interference; especially applicable to Double-Column Machining Center.
- Floating joint and interval connection block can compensate for installation error. Makes installation accuracy easy.
- Careful selection of the most suitable seals increases service life of counterbalance cylinders.

ZBBA1 / ZBBA2 Air-Oil Counterbalance Cylinder Feature Description：

- Concurrent high and low pressure cylinders also have the same characteristics as Air-Oil Counterbalance Cylinders.
- Balancing cylinder front and back ends are used with curved spherical flanges allowing for convenient installation, automatic centering, and contributing to longer service life.
- ZBBA2 Double Stroke Counterbalance Cylinder has a greatly reduced body length especially applicable to machines with strokes more than 1 meter.

Selection Standards：

Reference table for Z axis weight (including servo motor) with selection standards for Counterbalance Cylinder

Spindle Weight (Kgf)	Spindle Stroke (mm)	Applicable Counterbalance Cylinder Specifications	Installation Direction	Single Cylinder / Double Cylinder Drive	Air Pressure / Oil Pressure	Working Pressure (kgf/cm²)
400~600	600~800	ZBDAL-100N650TC-T	Piston rod retracting upward	Single Cylinder	Air Pressure	5-7
700~900	600~800	ZBBAL-40 (Rod Diameter 35)	Piston rod extending upward	Single Cylinder	Oil Pressure	40-60
1000~1200	800~1000	ZBBAL-50 (Rod Diameter 35)	Piston rod extending upward	Single Cylinder	Oil Pressure	40-60
1400~1800	600~800	ZBBAL-40 (Rod Diameter 35)	Piston rod extending upward	Double Cylinder	Oil Pressure	40-60
1900~2400	800~1000	ZBBAL-50 (Rod Diameter 35)	Piston rod extending upward	Double Cylinder	Oil Pressure	40-60
400~2400	600~1000	ZBBA1 (Single Stroke)	Piston rod extending downward	Single Cylinder	Air Pressure	5-60
400~2400	1000以上	ZBBA2 (Double Stroke)	Piston rod extending downward	Single Cylinder	Air Pressure	5-60
2500以上	1000以上	ZBBA2 (Double Stroke)	Piston rod extending downward	Double Cylinder	Air Pressure	5-60

ZBDAL Hydraulic Counterbalance Cylinder Dimensional Diagram

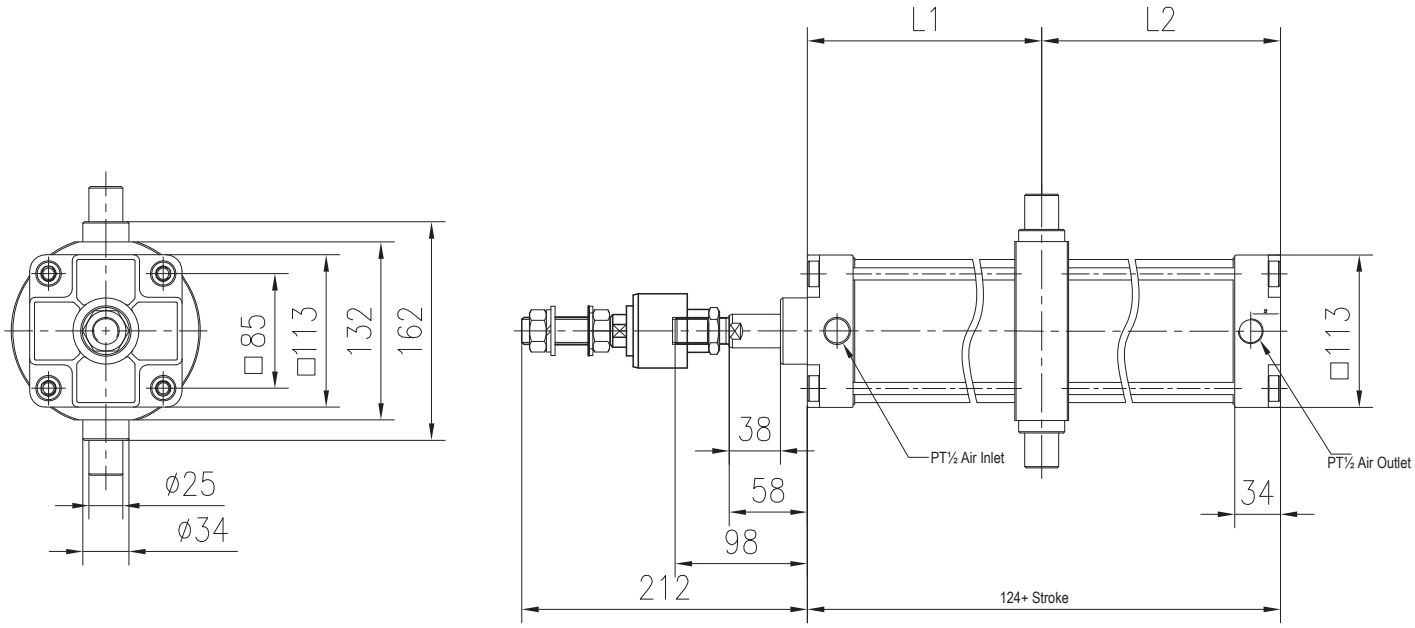

ZBDAL Pneumatic Counterbalance Cylinder Installation Diagram

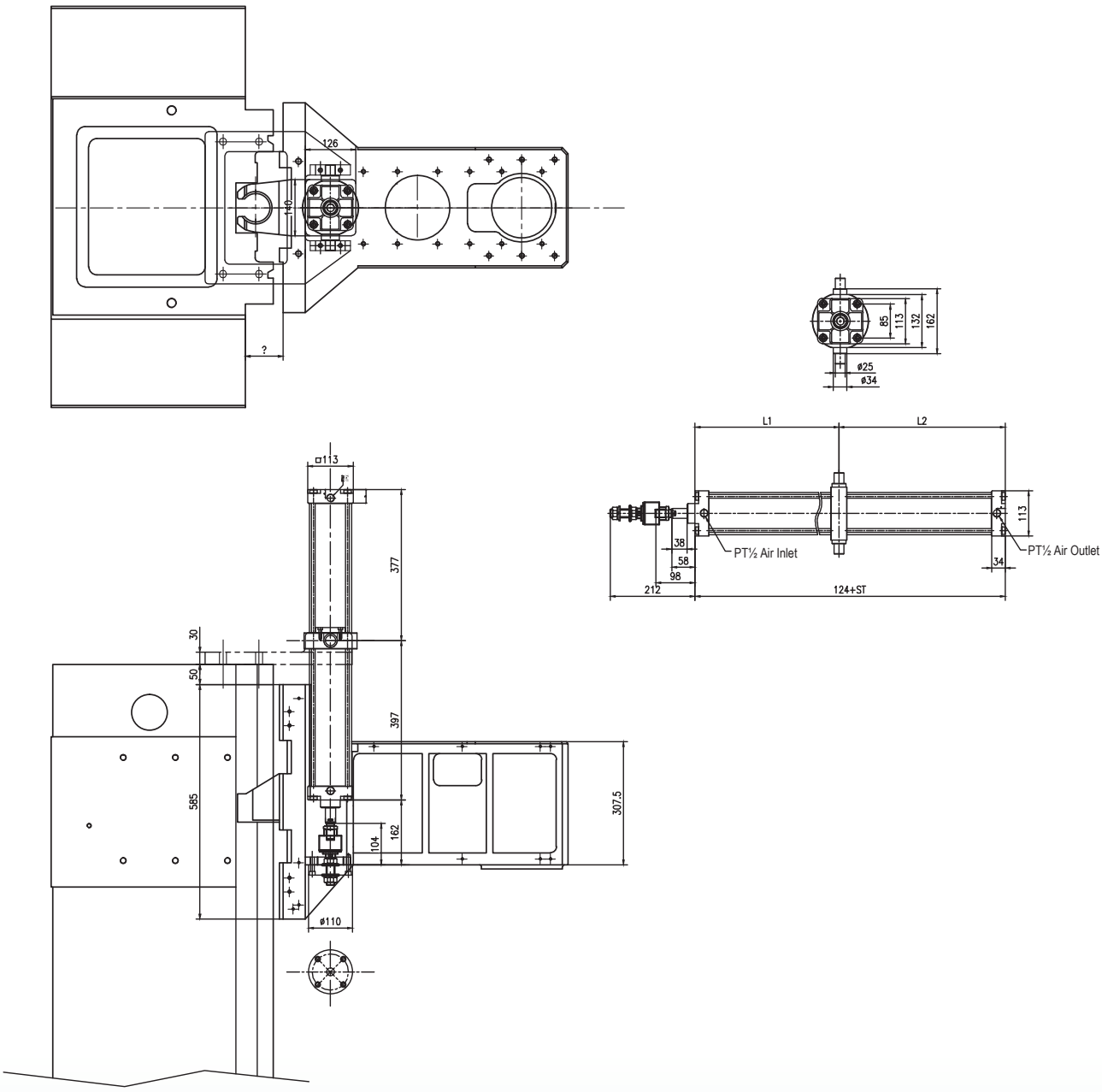

ZBBAL Hydraulic Counterbalance Cylinder Dimensional Drawing

ZBBAL-40 (Screw Thread extension Floating Joints)

ø35 Piston Rod

Figure			
1	Counterbalance Cylinder	BAL-40N780	1
2	Hex Head Screw	M20*1.5	2
3	Floating Joint	**M20*1.5** Screw Thread extension	1
4	Flat Gasket	Ø40*Ø20*4	1
5	Spacer Nut	M20*1.5	1

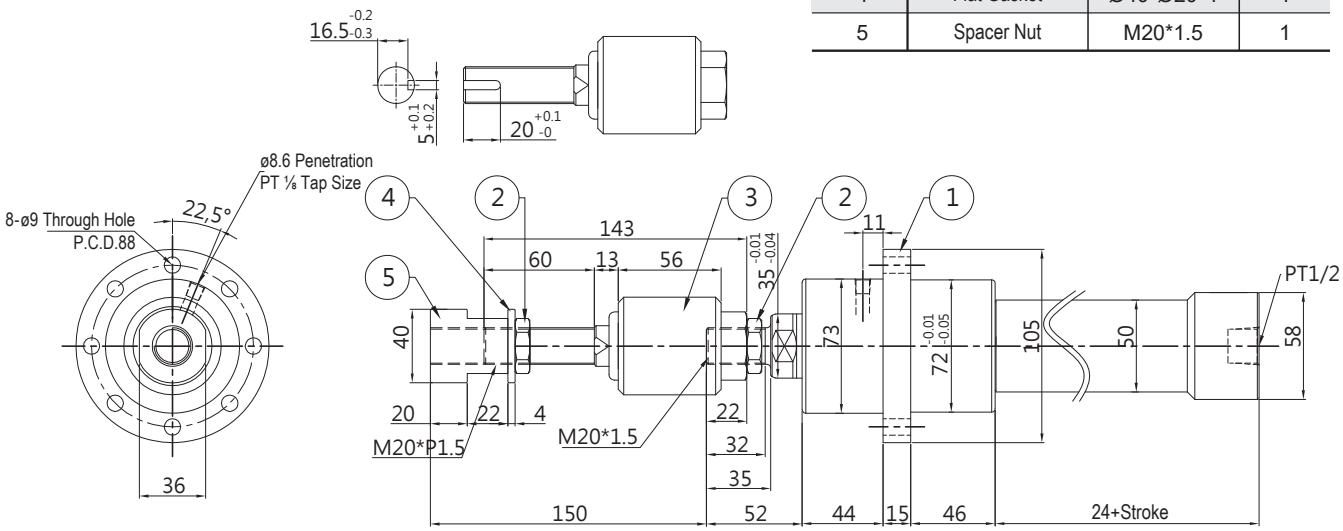

ZBBAL-50 (Screw Thread extension Floating Joints)

ø35 Piston Rod

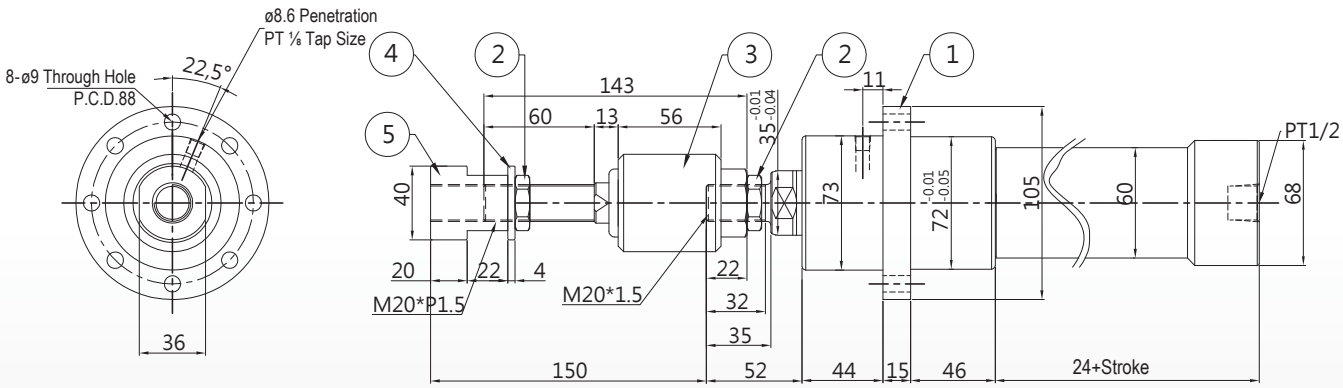

ZBBAL Hydraulic Counterbalance Cylinder Installation Diagram

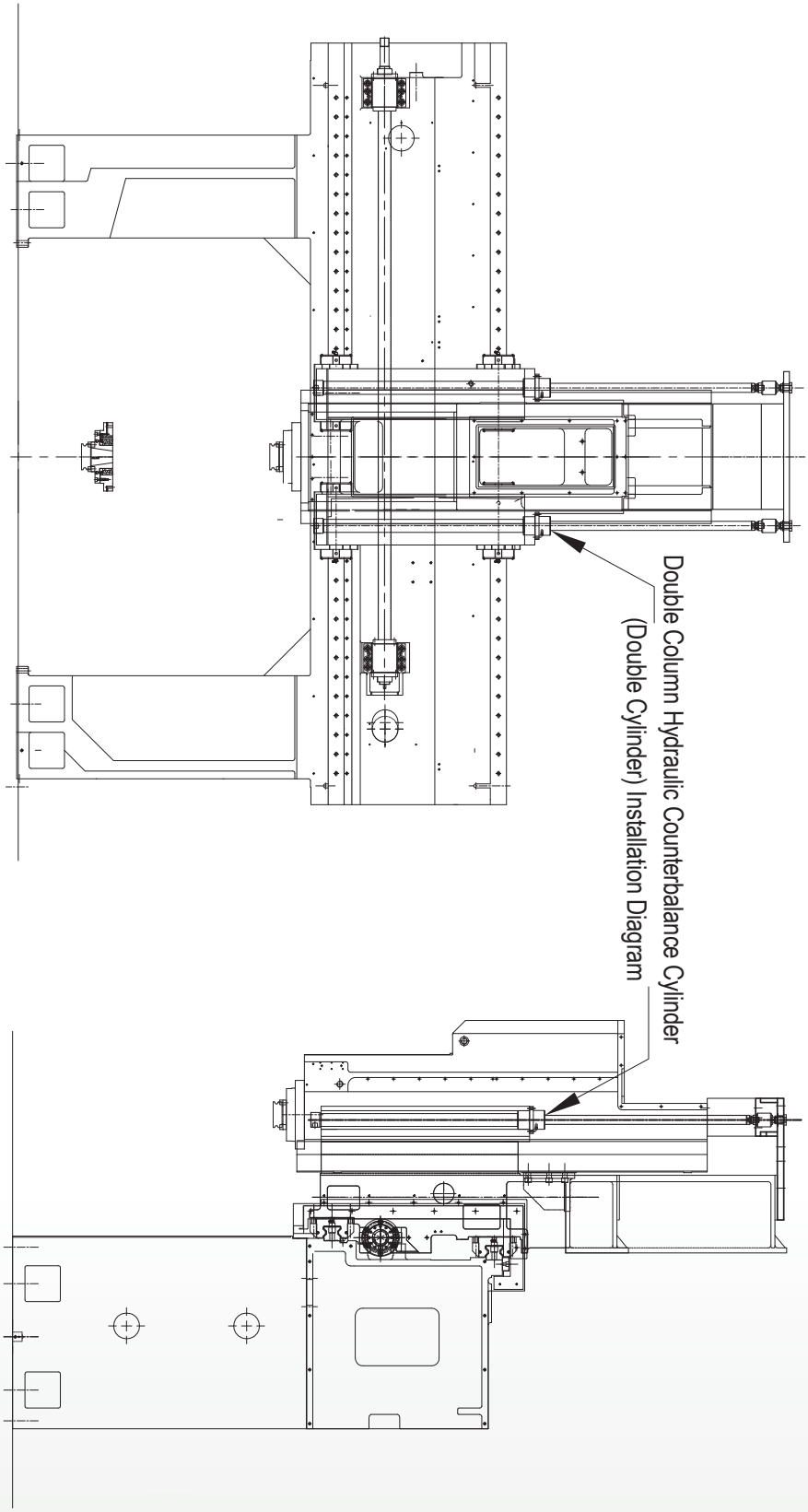

ZBBA1 Air-Oil Counterbalance Cylinder Installation Diagram

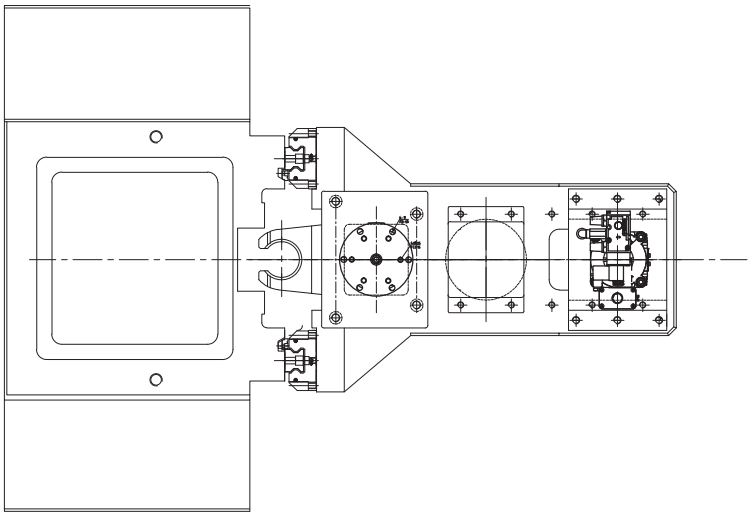

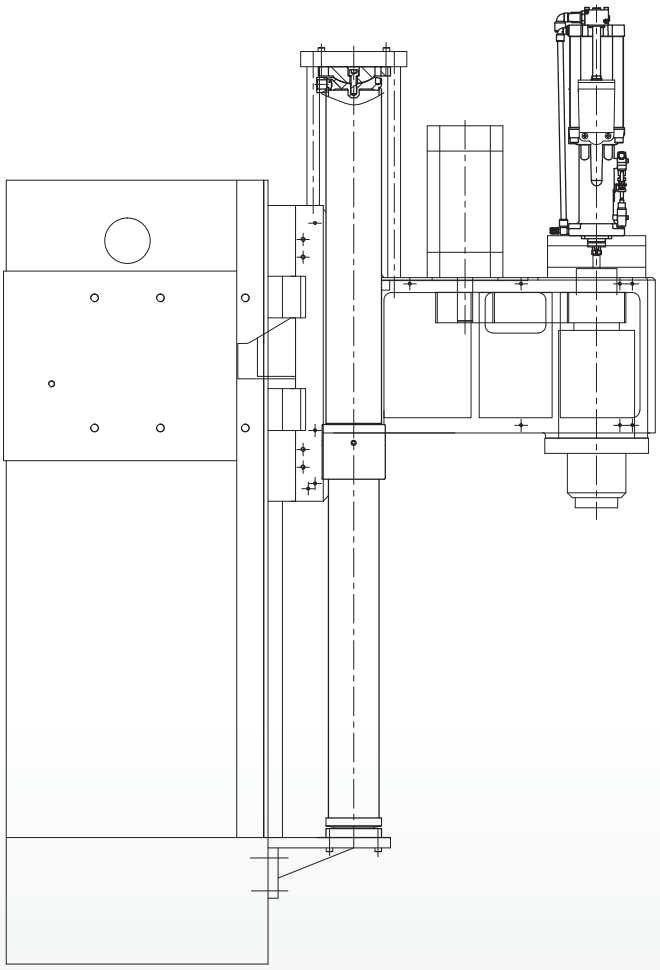

ZBBA2 Air-Oil Counterbalance Cylinder Installation Diagram

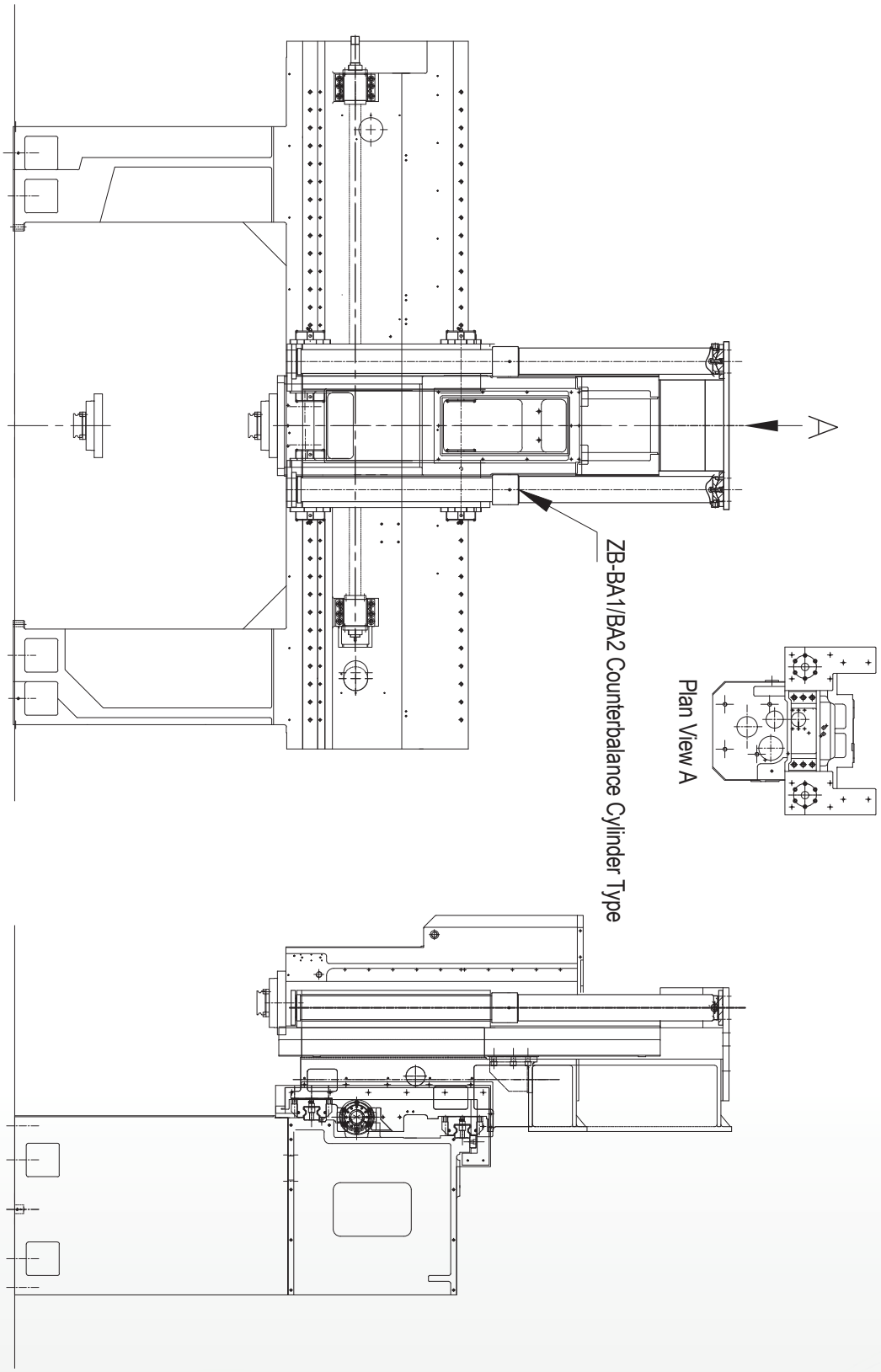

ZBBAS Ordering Guidelines

Ordering Guidelines

ZB BAS - 10 - 50 × 1000 - 5 - 2

1. Z-Axis Counterbalance Series
2. Counterbalance Air Supply Loading Module
3. Air Supply Pressure
   - **10**: 10 kg/cm^2
   - **60**: 60 kg/cm^2
4. Bore Inner Diameter
   - **50**: 50mm
5. Bore Length
   - **1000**: 1000mm
6. Number of Pipes per Module
   - **5**: 5 Pipes
7. Number of Modules
   - **2**: 2 Modules

ZBBAS

Air Supply Loading Module Feature Description：

- Multi-tube parallel air supply module design is installed around the Z-axis column; extra space pressure storage tank and machine packing not needed.
- Storage capacity (volume) is increased to reduce the rate of change in oil volume (or gas), supplying the counterbalance cylinder when the Z-axis rises. Can reduce the load rate of the Z-axis servo motor when it rises rapidly. Z-axis moves smoothly without jitter.
- Upper and lower length of the parallel multi-tube gas supply module can be adjusted according to the height of Z-axis column.
- The number of parallel gas supply modules can be selected according to the demand for air supply capacity of counterbalance cylinder. (Capacity of each module ≈10 liters).

ZBBAS

ZBBAS Counterbalance Air Supply Module Circuit Diagram：

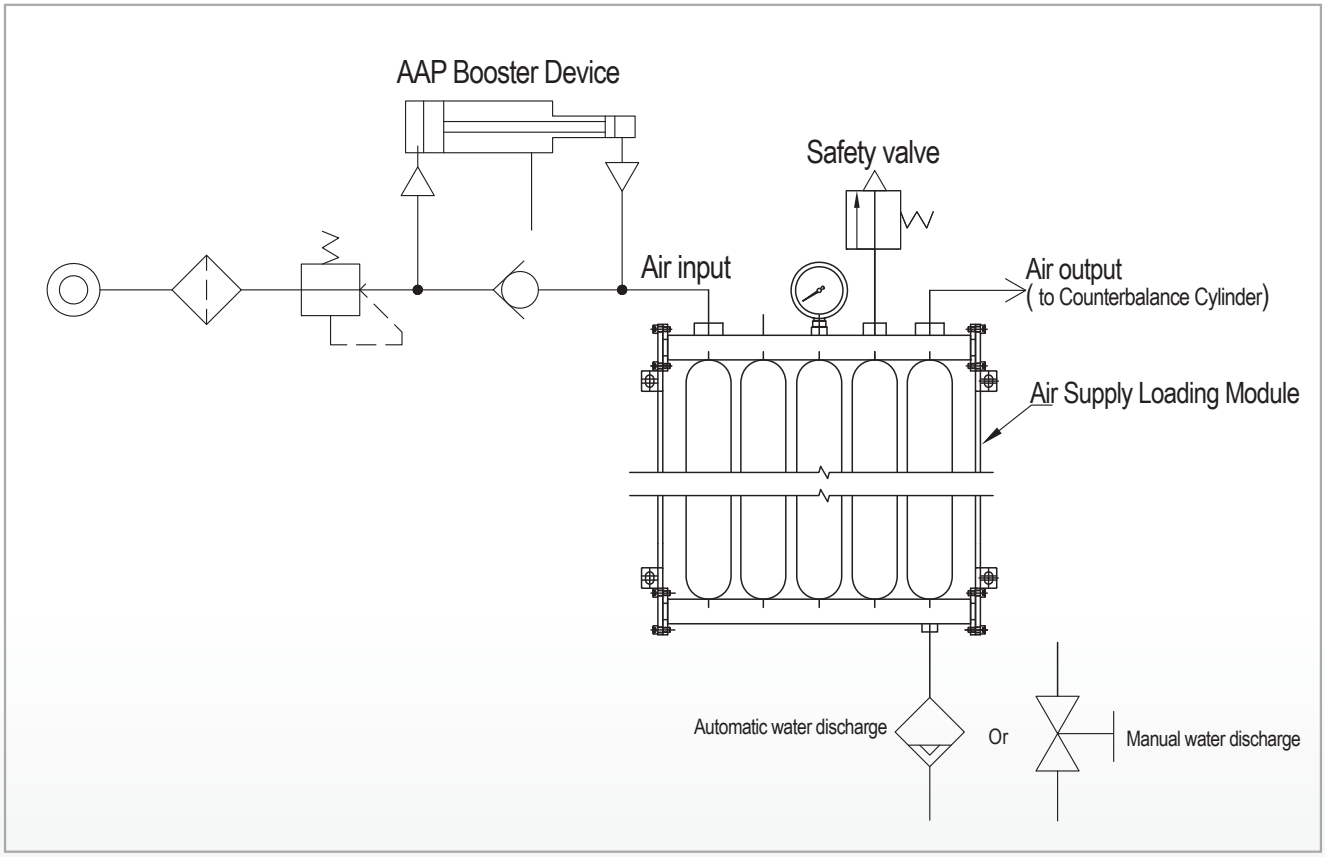

ZBBA1/BA2 Air-Oil Counterbalance Cylinder and Air Supply Loading Module Installation Diagram

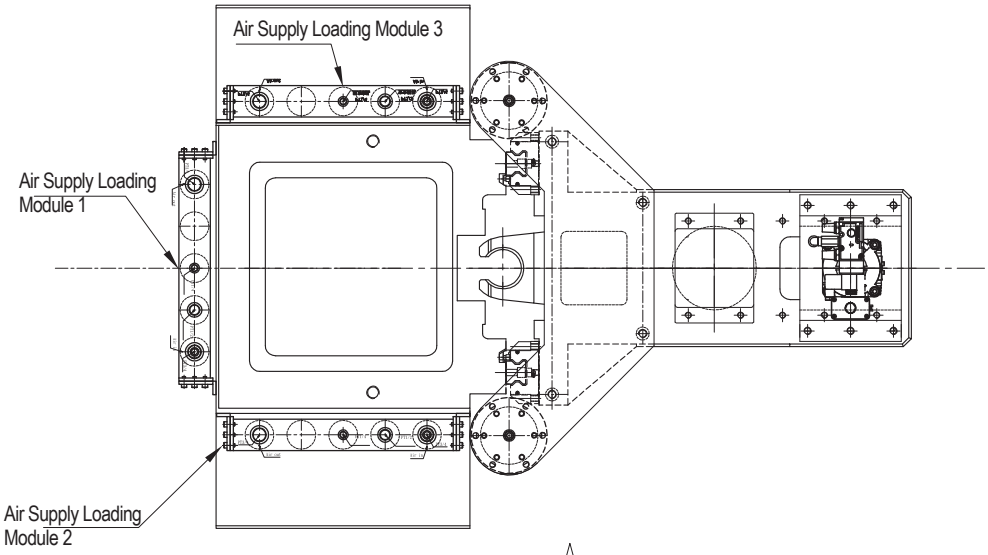

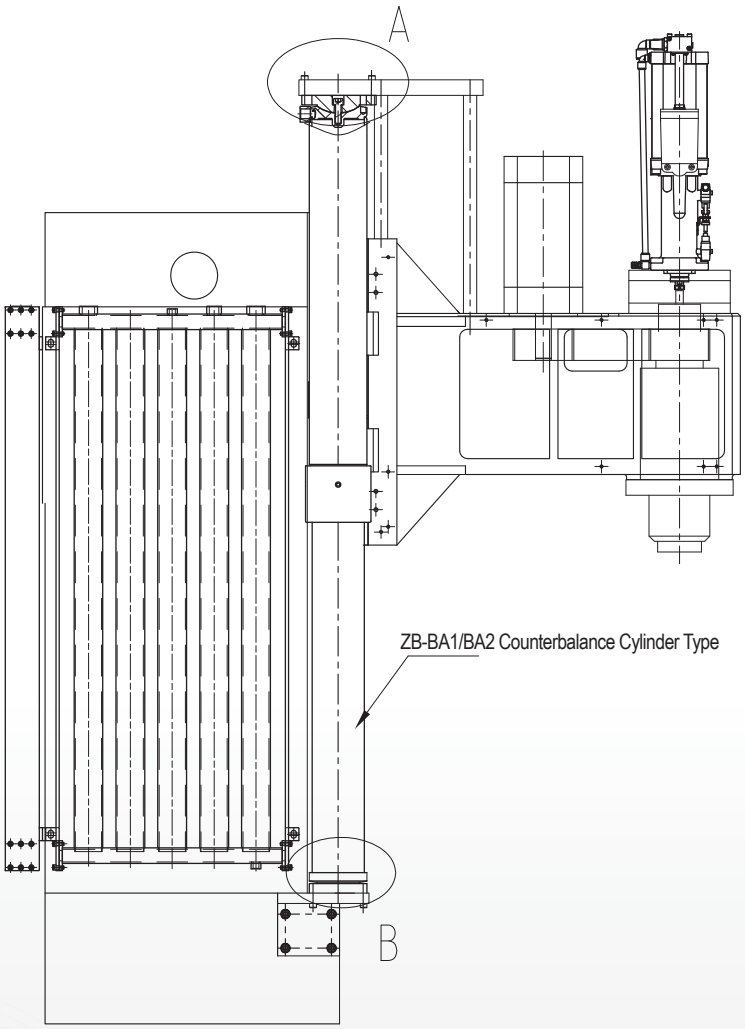

Section A Enlarged (3:1)

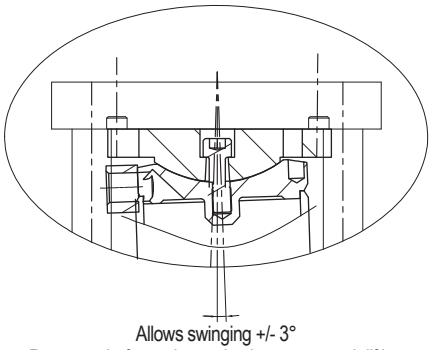

Allows swinging +/- 3°
Prevents shaft wearing and enhances smooth lifting

Allows swinging +/- 3°
Prevents shaft wearing and enhances smooth lifting

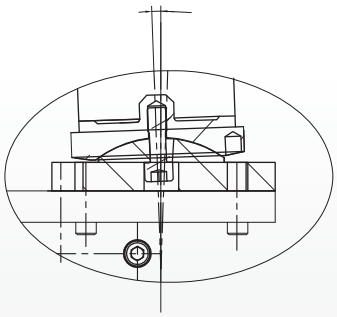

Section A Enlarged (3:1)