4 Power Components for Machining Centers

Hollow Barrel Hydraulic Unclamping Cylinder

◎Standard / **HUC**

HINAKA

HUC Ordering Guidelines

Ordering Guidelines

HUC S - 120 N 12 - 2 08

1. Type
2. Hollow Barrel Hydraulic Unclamping Cylinder
   Unmarked: Center Discharge Spindle Type
   S: No Center Discharge Spindle Type
3. Bore Size (mm)
4. Sensor
   N: Without Sensor (Customers self-install)
   P: OMRON Proximity Sensor
   L: OMRON Micro Switch Sensor
   R: RIKO Proximity Sensor
5. Stroke (mm)
6. Fixed Sensor Mount Type

1: Fixed sensor mount for No Center Discharge Spindle Type

2: Fixed sensor mount for Single Proximity Sensor

3: Fixed sensor mount for Double-Angle Proximity Sensor

4: Fixed sensor mount for Two piece Proximity Sensor

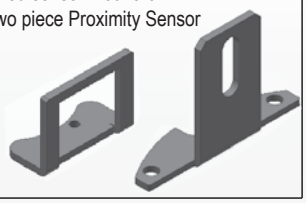

7. Appearance
   08: M08 / **12**: M12 / **18**: M18 / **30**: M30

HUC ø90N8

HUC ø110N10

HUC ø120N12, ø120N14

HUC Fixed sensor mount for Double-Angle Proximity Sensor

Feature Description：

- Specialized center liquid discharge spindle or no center discharge spindle can be selected.
- Boosting device power source (oil at one end and gas at the other end) and hydraulic station (oil at both ends) can be shared.
- Designed with additional gas and oil ports greatly improve tool change speed.
- Rotation resistant and sensor switch fixtures make it easily adjustable.
- Best selection of wear resistant seals gives little working fuel loss and consumption, decreased pollutants.
- Specialized anti-rusting process ensures piston rods and cylinder body are strong and free of corrosion.
- Hardened hit end increases service life.

Applicable Conditions :

Category	Conditions
Suitable fluid for clamp release end	Viscosity grade R32 ISO VG32 or equivalent
Suitable pressure for clamp release end (MPa)	3~7.5
Suitable fluid for return end	Boosting device (oil at one end and gas at the other end) and hydraulic station (oil at both ends) can be used together
Suitable pressure for return end (MPa)	0.4~7.5
Suitable gas discharge pressure (MPa)	≦0.7

Theoretical Force Chart :

Center Liquid Discharge Spindle Type	ø100× 11	ø120× 12	ø160× 16
Hydraulic Pressure (kgf/cm²)	Clamp release thrust (kg)		
60	2402	6105	7005
70	2802	7122	8137
80	3202	8140	9340

No Center Liquid Discharge Spindle Type	HUCS-120N20
Hydraulic Pressure (kgf/cm²)	Clamp release thrust (kg)
30	4132
40	5150
50	6887

HUC-100P11-308 Hollow Barrel Hydraulic Unclamping Cylinder

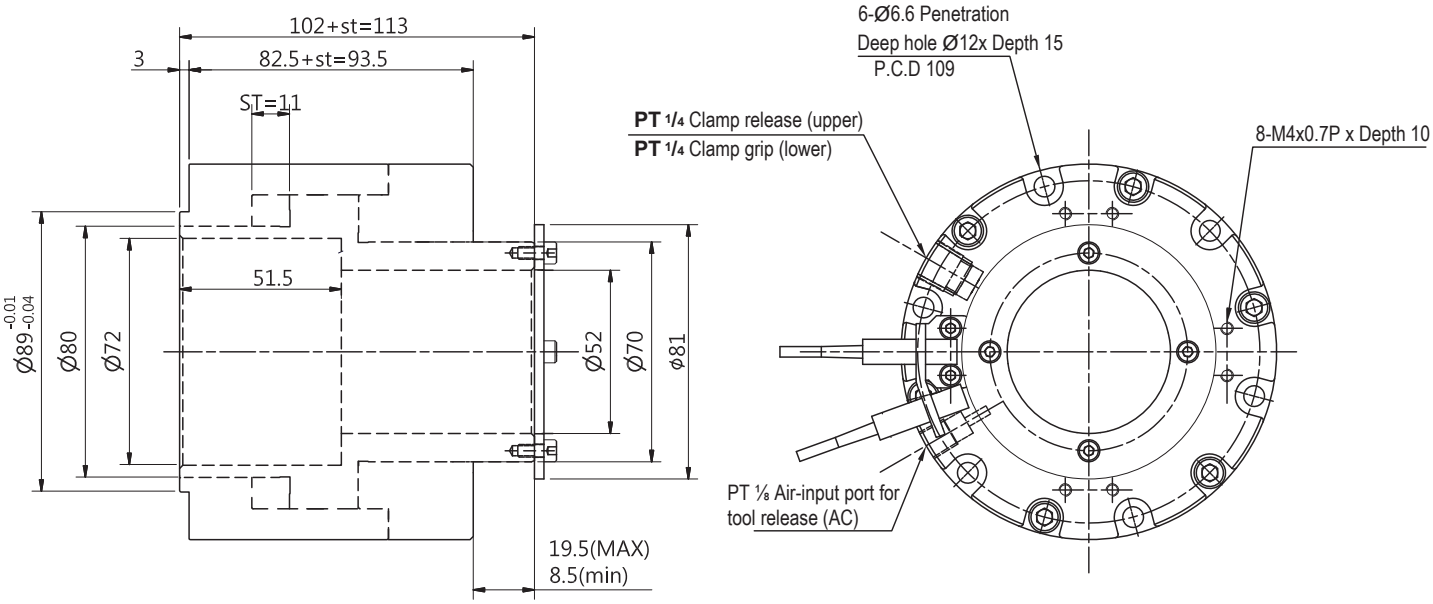

HUC-120P12-408 Hollow Barrel Hydraulic Unclamping Cylinder

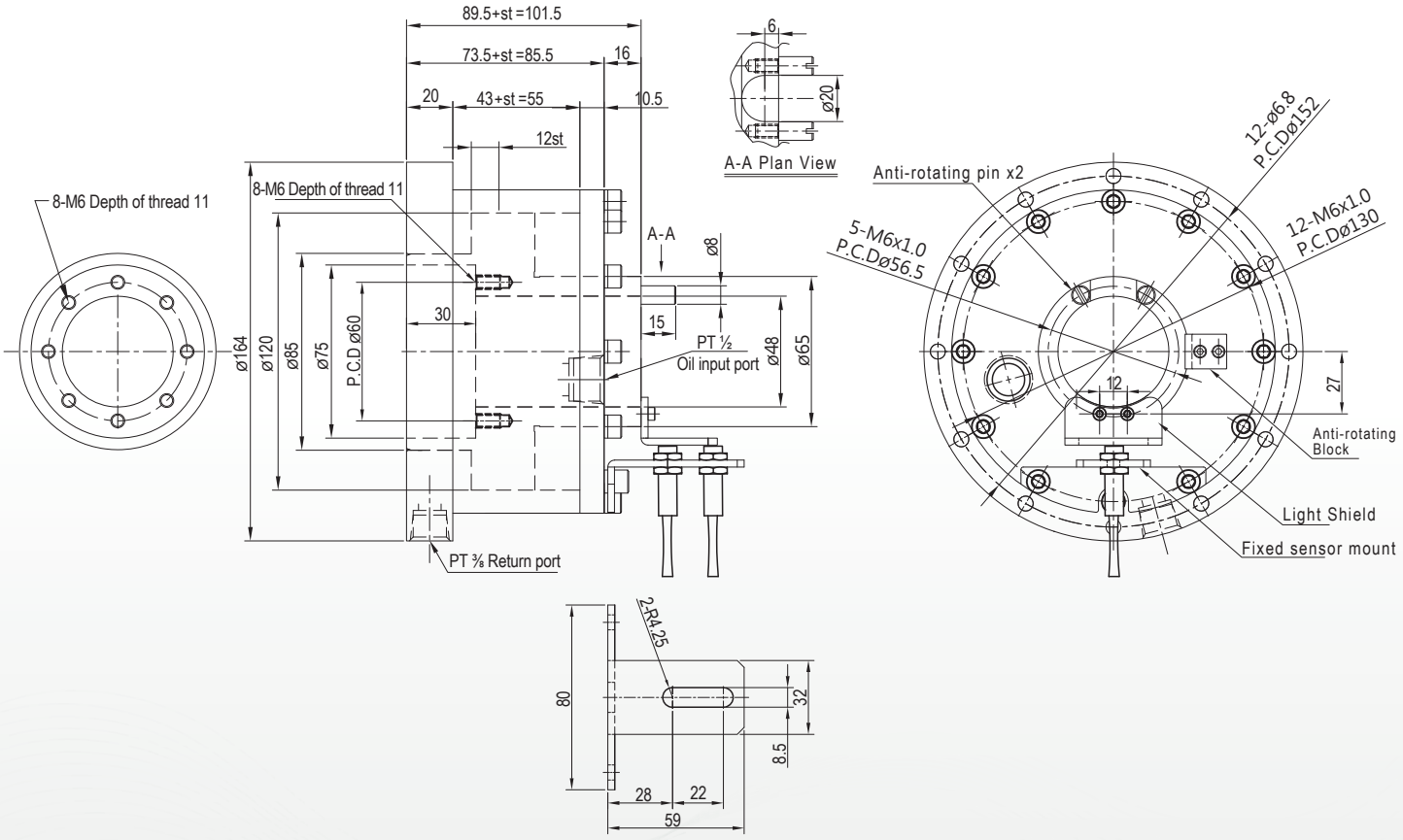

HUC-120R14-208
Hollow Barrel Hydraulic Unclamping Cylinder

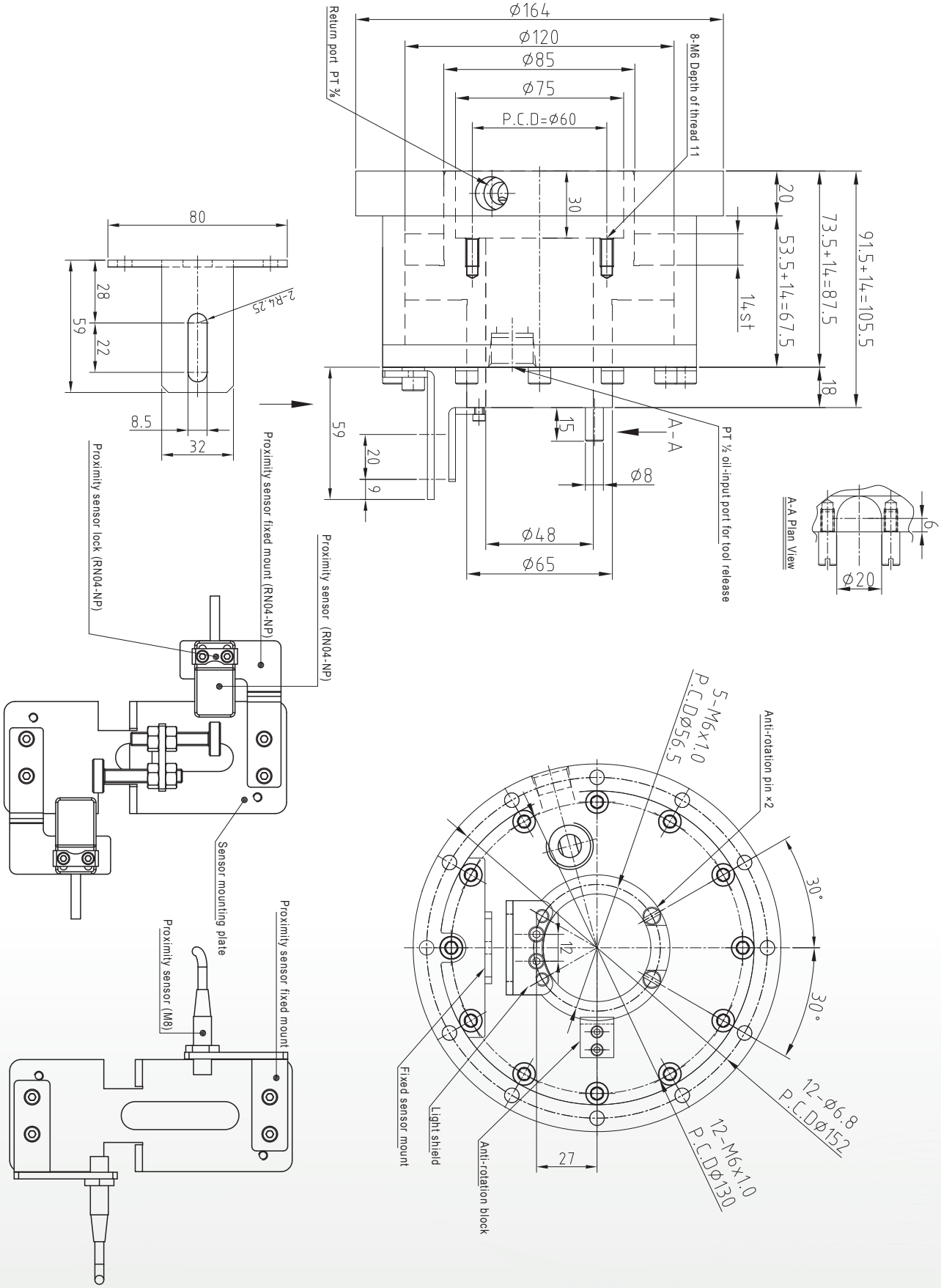

HUC-160N16-308 Adjustable Stroke (7mm)
Hollow Barrel Hydraulic Unclamping Cylinder

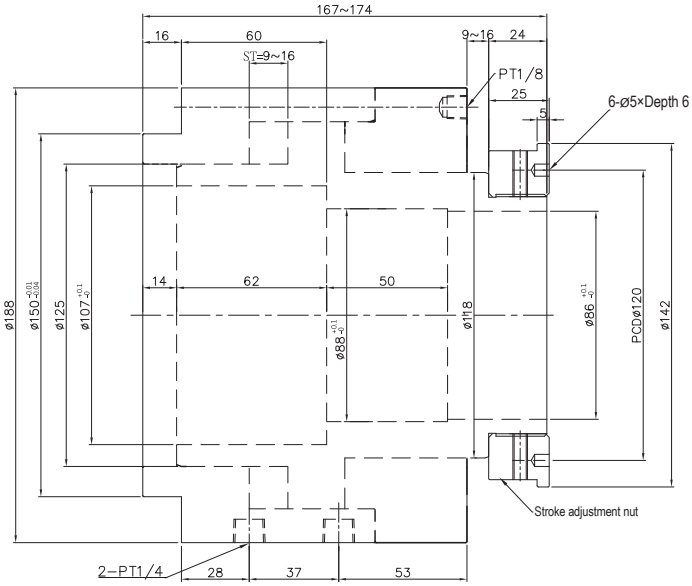

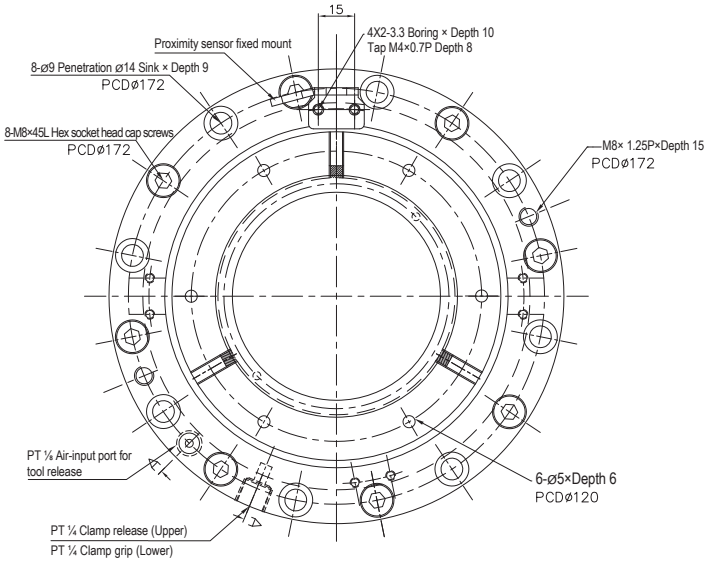
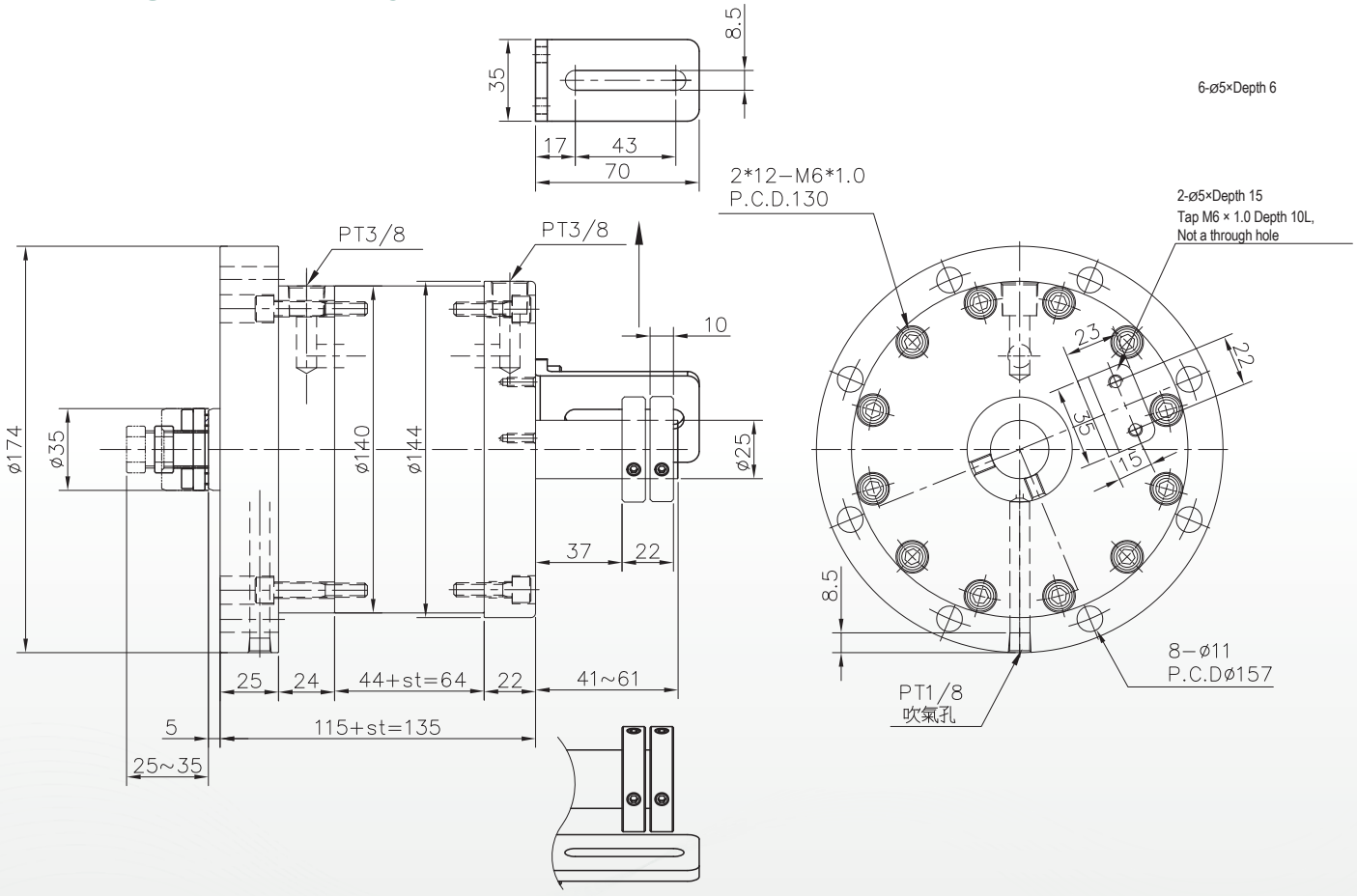
HUC-120P12-408
Hollow Barrel Hydraulic Unclamping Cylinder Without Coolant Through Spindle Type