4 Power Components for Machining Centers

Boosting Cylinder

Patent No.: M317311

◎Pneumatic Unclamping Cylinder / **DJ2A**

BPT Output Force 2.5T~5.5T

HINAKA

DJ2A Technical Information

DJ2A

Standard Pneumatic Unclamping Cylinder

Especially for one step clamping

- Working Pressure (kgf/cm^2)

  Ensure the operating pressure tolerance is within ±0.1MPa(1kgf/cm^2).
  Recommended operating pressure 0.6MPa(6kgf/cm^2)

- Spindle Total Stroke (mm)

  Total stroke must include tolerance from the spindle.

- Unclamping cylinder hitting endpoint must include tolerance from the spindle (mm)

  Recommended tolerance of 0.5mm from spindle.

- Spindle Clamp Total Output (kgf)

  Allow an extra 20%–30% for spindle clamp total output.

- Solenoid Valve Voltage
- Unclamping cylinder operates with tool carousels BT30#, BT40#, BT50#
- Spindle Unclamp Tip Distance (mm)
- Spindle Pulling Force (kgf)

Specifications Table:

Working Pressure	0.4MPa~0.6MPa(4kgf/cm^2~6kgf/cm^2) Clean Compressed Air
Temperature Range	0℃~60℃
Total Stroke	13,15,17
Voltage	DV24, AC110, 220

Applications:

- Used for belt or gear driven transmissions. Pull force less than 1000 kg
- During tool carousel matching, T to T can change tools at 1.0 - 1.2 seconds
- Use for centralized liquid discharge spindle.

Caution:

- For fast clamping, customer must ensure sufficient pressure or directly install gas tank (6 liter tank).
- In order for high speed clamping, φ 12 air pressure tubes must be installed at inlet and outlet ports.

Ordering Guidelines

DJ2A - 160 M 15 T3 P 1V

1. Pneumatic Unclamping Cylinder
2. Bore Size
3. Sensor
   - **M**: With Magnet
   - **N**: Without Magnet
4. Stroke (mm)
5. Stage
6. Auxiliary Equipment
   - **P**: Proximity Sensor (E2E-X2D1-N Thread M8 ×1.0 or equivalent)
   - **L**: Micro Switch Sensor (SHL-Q55)
   - **H**: Proximity Sensor Fixed Mount
   - **M**: Proximity Sensor + Fixed Mount
   - **F**: No Auxiliary Equipment
7. Solenoid Valve
   - **1V**: 4 Port 2 Way Quick Solenoid Valve
   - **2V**: 5 Port 2 Way Solenoid Valve (Screw Lock Type)

DJ2A Features / Circuit Diagram

Feature Description:

- Completely pneumatically driven, multi-stage double force mode.
- Suitable for belt and gear type transmissions, etc. High speed clamps are required
- Directly install on spindle clamp.
- Adapter plate can be installed and exchanged with BPT unclamping booster cylinder.
- Ultra fast tool change, Tool-to-Tool exchange within 1 second
- DJ2A Unclamping cylinder control valve uses an internally mounted tube connection, allowing strong air flow and avoids pipe connections , etc. Also, without additional costs of assembly or pipe fitting labor hours; permanent assembly.
- DJ2A Uclamping cylinder is completely pneumatically driven, does not need fueling and no possible oil leakage, preventing oil damage to the high speed spindle bearings.

Back end of piston rod automatically functions as a blower when clamping

Forward stroke adjustment capability

Hardened endpoint, adjustable reverse tooth size, impact resistant, convenient adjustment

Circuit Diagram:

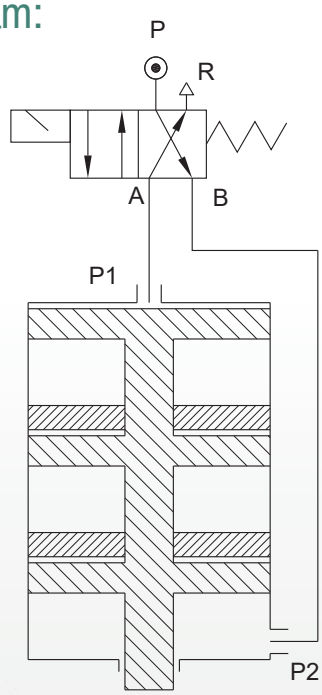

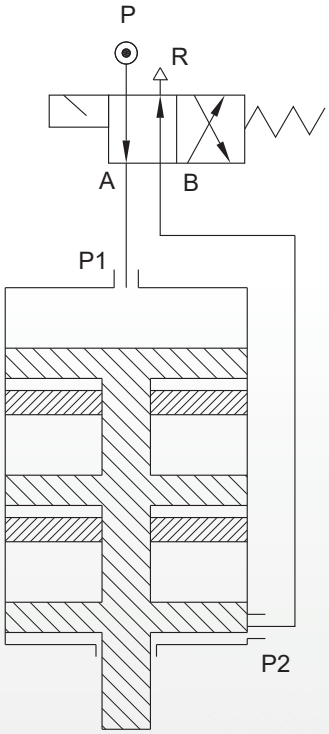

DJ2A Standard Model

Micro Switch Sensor Setup

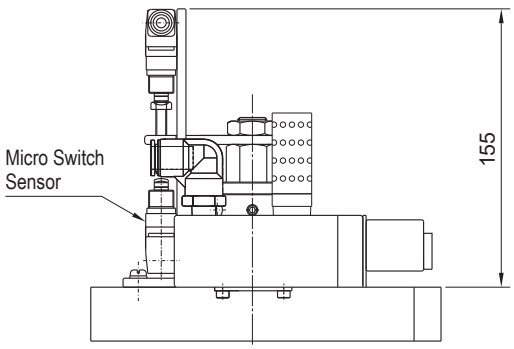

Proximity Sensor Setup

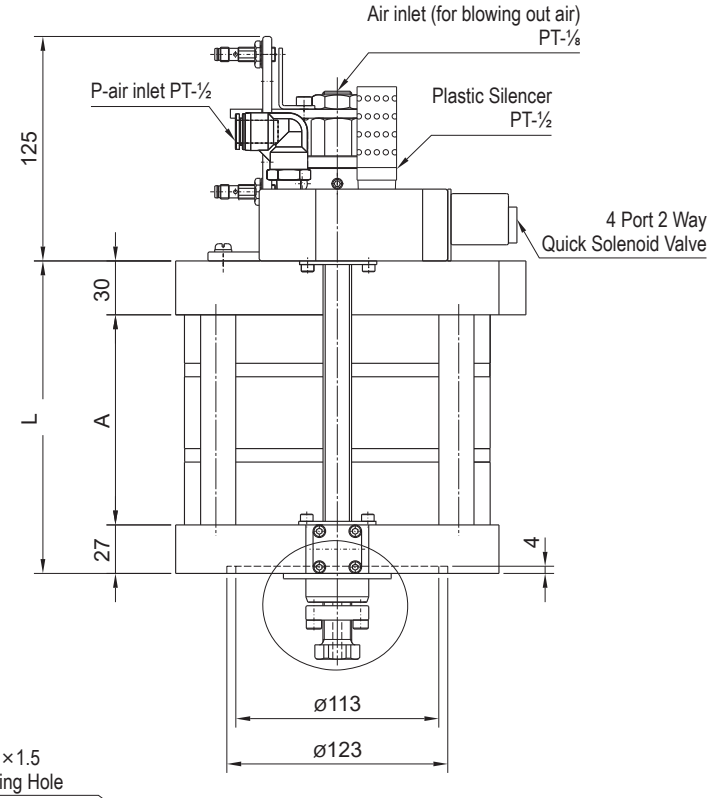

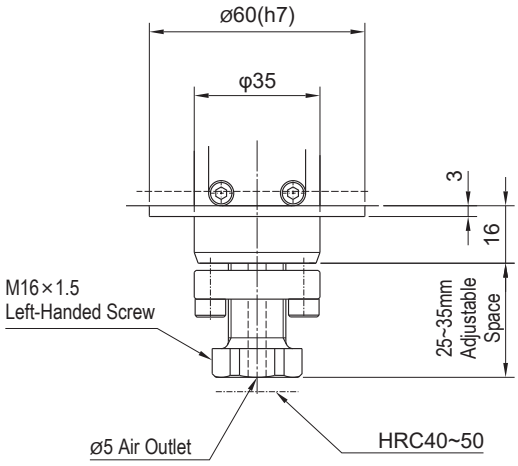

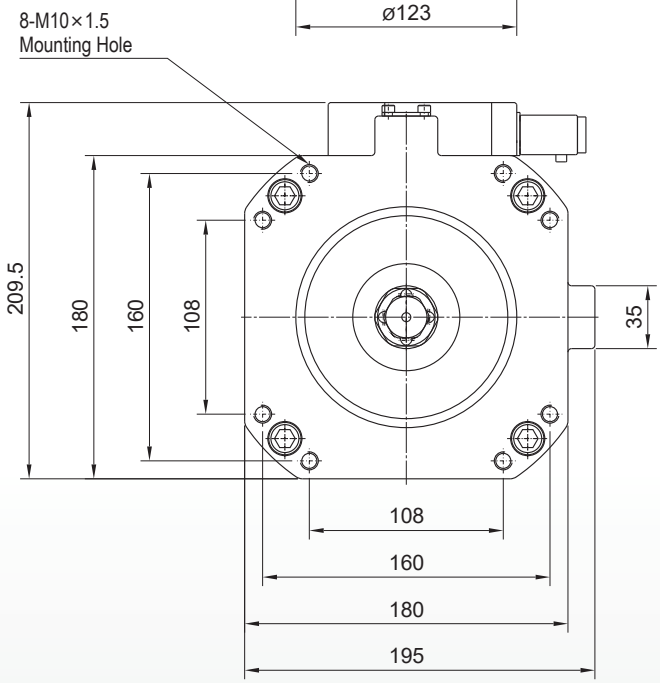

Unit: mm

Specifications	A	L	Theoretical Output (kgf)		
			4	5	6
2.5T× ST13	66	123	1567	1959	2352
2.5T× ST15	70	127			
2.5T× ST17	74	131			
3.5T× ST13	111	168	2331	2914	3499
3.5T× ST15	117	174			
3.5T× ST17	123	180			
4.5T× ST13	157	214	3095	3869	4646
4.5T× ST15	165	222			
4.5T× ST17	173	230			
5.5T× ST13	202	259	3859	4824	5793
5.5T× ST15	212	269			
5.5T× ST17	222	279			