4 Power Components for Machining Centers

Boosting Cylinder

Patent No.: M458268 / M353794 / M353795 / M359688
ZL20132007019309 / ZL200820181745.2 / ZL200920002737.1

◎Boosting Unclamping Cylinder / **BPT**

BPT Output Force 2T~7T

HINAKA

BPT Technical Information

BPT

Standard Boosting Unclamping Cylinder

Especially for one stage clamping

BPTQ

High Speed Boosting Unclamping Cylinder

High speed clamp improves efficiency by at least 40%

BPTH

High Tonnage Boosting Unclamping Cylinder

Output Force 5T

Specifications Table:

Item / Specifications	BPT Standard Model	BPTQ High Speed Model	BPTH High Tonnage Model
Working Pressure	0.2MPa~0.7MPa(2kgf/cm^2~7kgf/cm^2) Clean Compressed Air		
Operating Oil	Viscosity grade CPC-R32 ISO VG32 or equivalent		
Temperature Range	0℃~60℃		
Total Stroke	13,15,17		
Voltage	DV24, AC110, 220		

Caution:

■ Working Pressure (kgf/cm^2)

Ensure the operating pressure tolerance is within ±0.1MPa(1kgf/cm^2).
Recommended operating pressure 0.6MPa(6kgf/cm^2)

■ Spindle Total Stroke (mm)

Total stroke must include tolerance from the spindle.

■ Unclamping cylinder hitting endpoint must include tolerance from the spindle (mm)

Recommended tolerance of 0.5mm from spindle.

■ Spindle Clamp Total Output (kgf)

Allow an extra 20%–30% for spindle clamp total output.

■ Solenoid Valve Voltage

■ Unclamping cylinder operates with tool carousels BT30#, BT40#, BT50#

■ Spindle Unclamp Tip Distance (mm)

■ Spindle Pulling Force (kgf)

Ordering Guidelines

BPT Q - 10 U 5 S 30 P 13 M

1. Boosting Unclamping Cylinder
2. Type
   - Unmarked: Standard Model
   - **Q**: High Speed Model
   - **H**: Tonnage Model
3. Pneumatic Bore Size
   - **10**: φ100 / **12**: φ125 / **16**: φ160 / **20**: φ200
4. Application
   - **U**: For MC Unclamping / **E**: For other Equipment
5. Hydraulic Bore Size
   - **5**: φ50 / **6**: φ63 / **8**: φ80
6. Pneumatic Cylinder Model
   - **S**: Standard
7. Air pressure force of 6kgf/cm^2 at origin
   - **20**: 2000kg / **25**: 2500kg / **35**: 3500kg
   - **45**: 4500kg / **60**: 6000kg / **70**: 7000kg
8. Auxiliary Equipment
   - **P**: Proximity Sensor (E2E-X2D1-N Thread M8 ×1.0 or equivalent)
   - **L**: Micro Switch Sensor (SHL-Q55)
   - **R**: Proximity Sensor (RiKO/RN04-N)
   - **H**: Proximity Sensor Fixed Mount
   - **F**: No Auxiliary Equipment
   - **S**: Schneider Electric Switches
9. Total Stroke (mm)
   - **13**, **15**, **17**
10. Liquid Level Sensor
    - **M**: With Liquid Level Sensor
    - **N**: Without Liquid Level Sensor

BPT Features / Circuit Diagram

Feature Description:

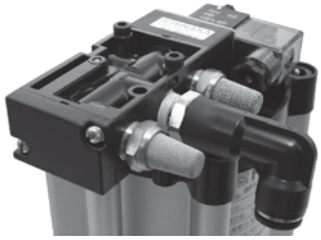

■ Ultra-fast tool change, tool-to-tool switch can be within 1 second

BT30 T-to-T ≈0.98 seconds, BT40 T-to-T ≈1~1.2seconds.

This clamp takes 0.17 seconds to change.

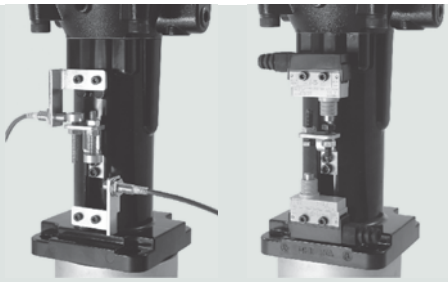

■ Upper and Lower Clamp Release Mechanism Improves Speed and Tool Change Accuracy

Simple and sleek design doesn't easily loosen. Precise positioning can increase tool change accuracy and speed.

■ Modular Design

Control valve connected by outer wall mount , interior cylinder and tubing allows for larger gas flow with a simple and pleasant appearance; significantly lowers installation and tubing costs.

■ Aluminum Structure, One-Body Molding

Light weight structure can effectively reduce load on Z-axis and extend life of ball screws and slide way

■ Careful Unclamping Cylinder Inner Seal Selection

We choose the best seals by taking advantage of our many years of experience and doing extensive testing. Choosing the right seals decreases fuel consumption, prevents the need for frequent lubrication, and protects the high speed spindle from oil damage.

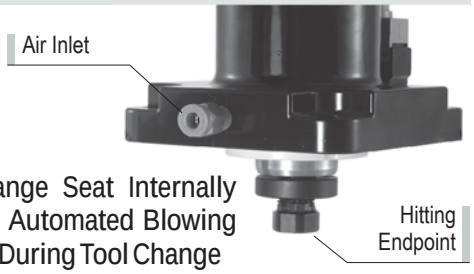

■ Fixed Flange Seat Internally Designed Automated Blowing Cleaning During Tool Change

No external air blowing valve attachment needed.

■ Hardened Endpoint, Adjustable Reverse Tooth Size, Impact Resistant, Convenient Adjustment

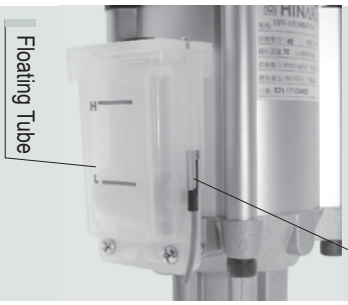

■ Oil Cup Liquid Level Sensor

Flat oil replenishing dispenser fits flush on the on outer wall making it stable, leak proof, doesn't occupy extra space, and won't twist. External sensor linked to inner float detects oil level and can specify advanced computer settings to prevent clamp impact or unnecessary shutdown. Elegant sturdy oil proof assembly, impact resistant; transparent materials increase visibility.

Circuit Diagram:

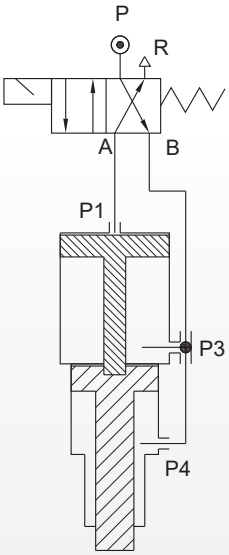

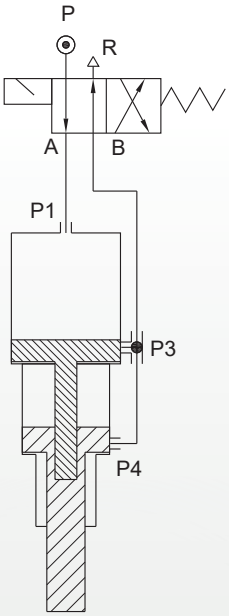

BPT

HINAKA
HINAKA Fluid Power Co., Ltd
Scrupulosity, Specialty, Sincerity, Satisfactory

BPT Standard Model

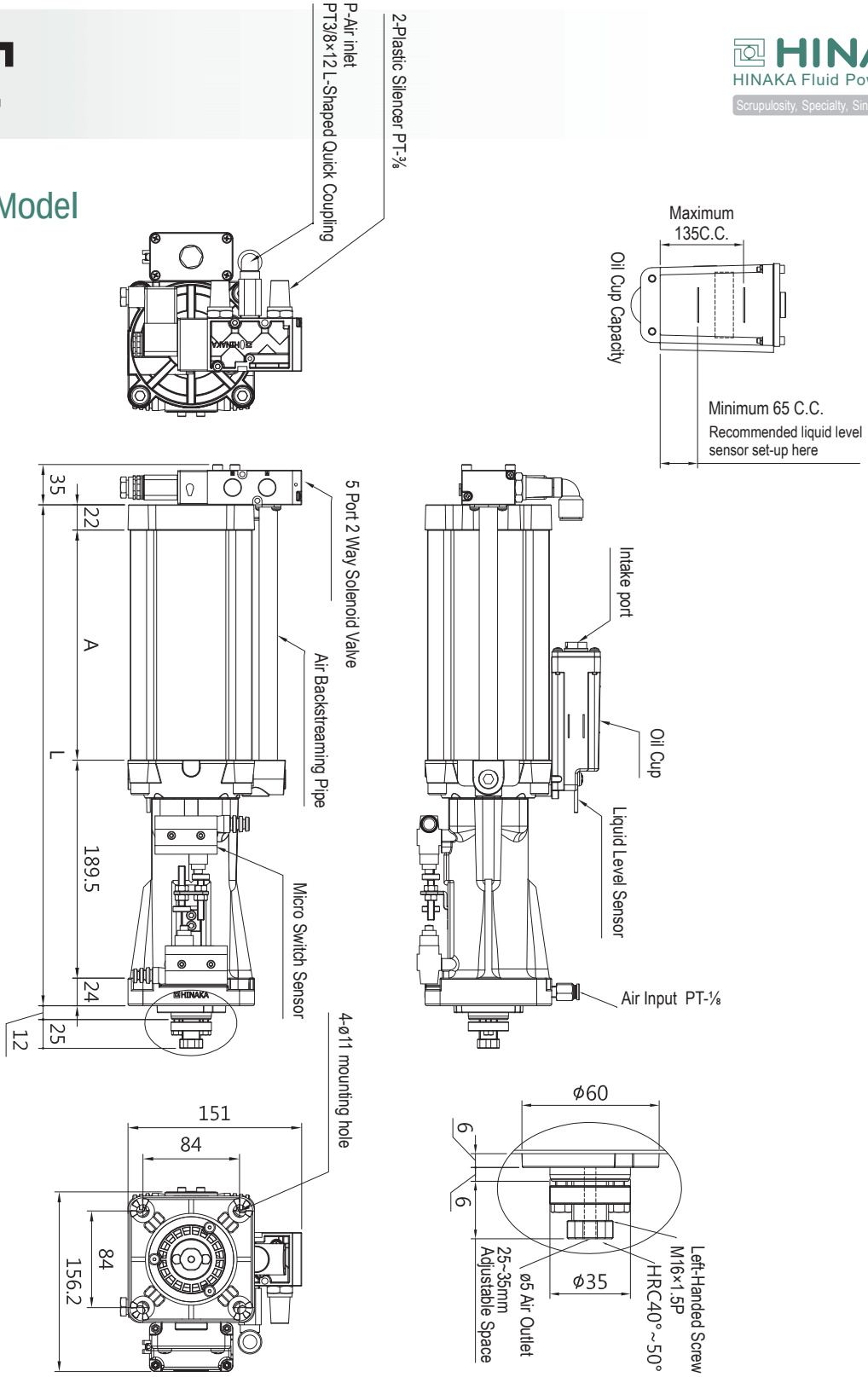

Unit: mm

Specifications	A	L	Theoretical Output (kgf)			Ratio
			4	5	6	
2.0T× ST13	103	339	1256	1570	1884	16
2.0T× ST15	111	347				
2.0T× ST17	119	355				
2.5T× ST13	116	352	1564	1956	2347	19.9
2.5T× ST15	126	362				
2.5T× ST17	136	372				
3.0T× ST13	132	367	1963	2453	2944	25
3.0T× ST15	145	381				
3.0T× ST17	157	392				

Specifications	A	L	Theoretical Output (kgf)			Ratio
			4	5	6	
3.5T× ST13	151	386	2423	3029	3634	30.8
3.5T× ST15	167	403				
3.5T× ST17	182	417				
4.5T× ST13	181	416	3066	3833	4600	39
4.5T× ST15	200	435				
4.5T× ST17	220	455				

- Remark 1. Standard model without hole, customer must indicate.
- Remark 2. Proximity Sensor is available.

BPTQ

BPTQ High Speed Model

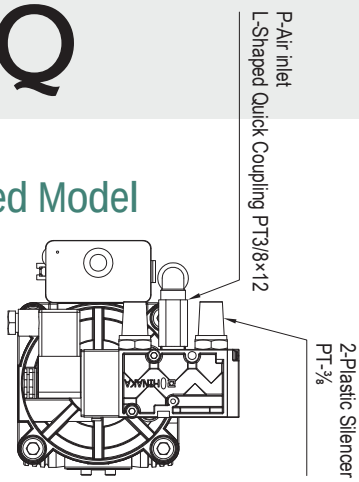

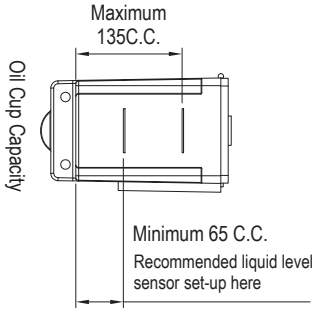

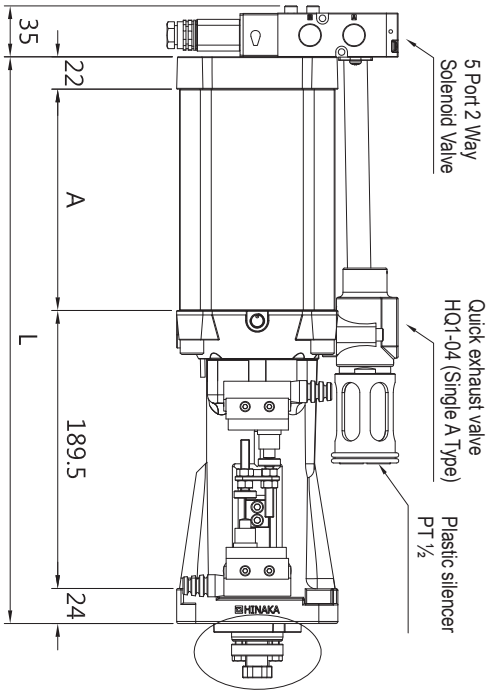

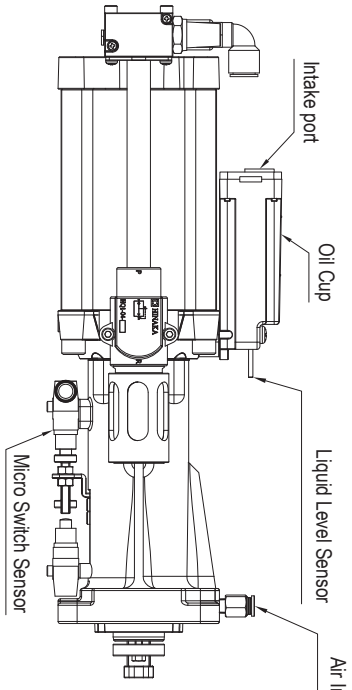

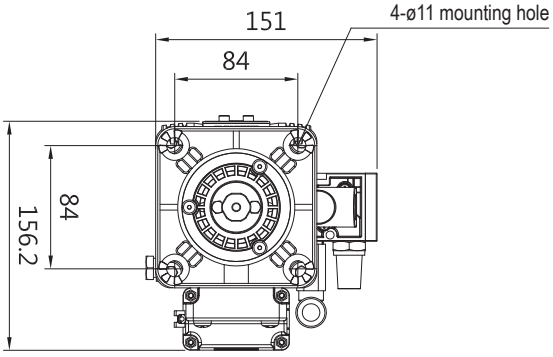

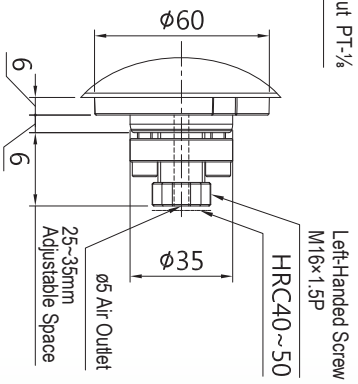

Unit: mm

Specifications	A	L	Theoretical Output (kgf)			Ratio
			4	5	6	
2.0T× ST13	103	339	1256	1570	1884	16
2.0T× ST15	111	347				
2.0T× ST17	119	355				
2.5T× ST13	116	352	1564	1956	2347	19.9
2.5T× ST15	126	362				
2.5T× ST17	136	372				
3.0T× ST13	132	367	1963	2453	2944	25
3.0T× ST15	145	381				
3.0T× ST17	157	382				

Specifications	A	L	Theoretical Output (kgf)			Ratio
			4	5	6	
3.5T× ST13	154	389	2423	3029	3634	30.8
3.5T× ST15	151	386				
3.5T× ST17	167	403				
4.5T× ST13	182	417	3066	3833	4600	39
4.5T× ST15	181	416				
4.5T× ST17	200	435				

- Remark 1. Standard model without hole, customer must indicate.
- Remark 2. Proximity Sensor is available.

HINAKA
HINAKA Fluid Power Co., Ltd
Scrupulosity, Specialty, Sincerity, Satisfactory

BPTH
High Tonnage Boosting Unclamping Cylinder

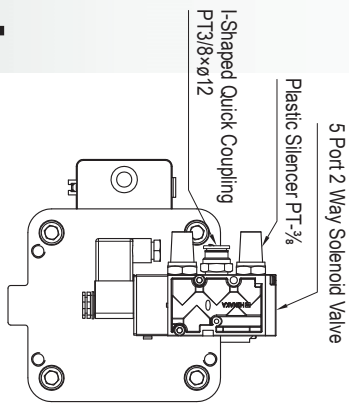

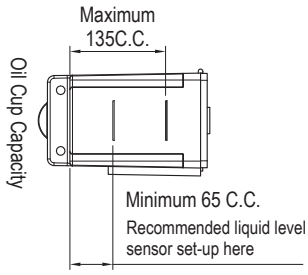

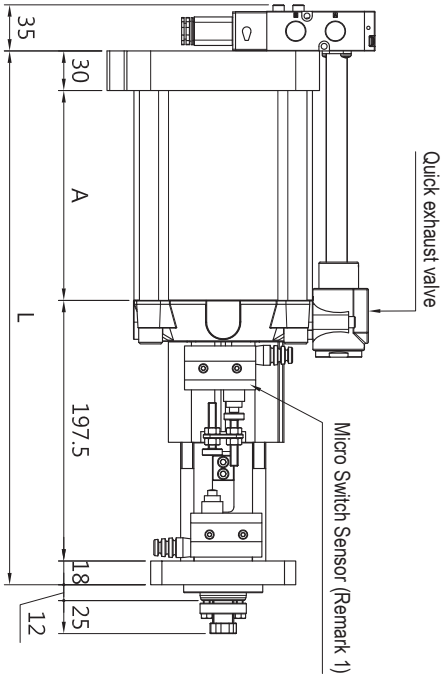

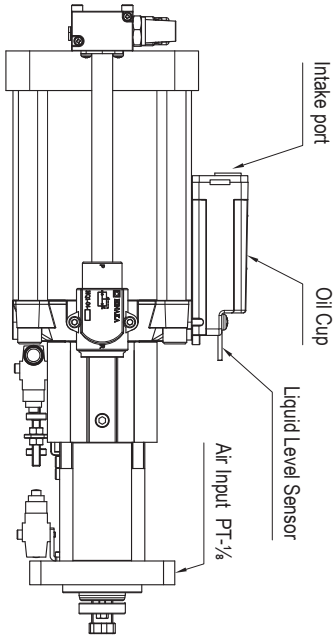

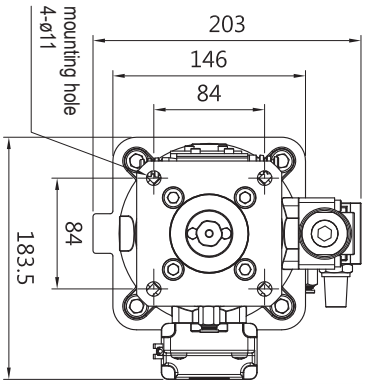

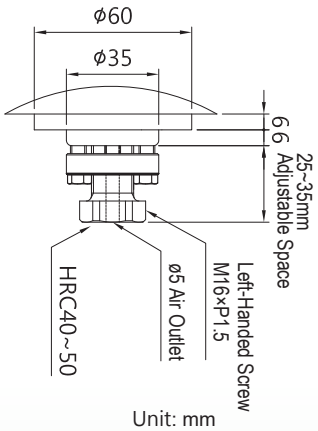

Unit: mm

Specifications	A	L	Theoretical Output (kgf)			Ratio
			4	5	6	
6.0T× ST13	134	369.5	3787.6	4734.5	5681.4	48.23
6.0T× ST15	149	384.5				
6.0T× ST17	164	399.5				
7.0T× ST13	159	394.5	4793.7	5992.1	7190.5	61.04
7.0T× ST15	179	414.5				
7.0T× ST17	199	434.5				

● Remark 1. Proximity Sensor is available.