3 Boosting Drives

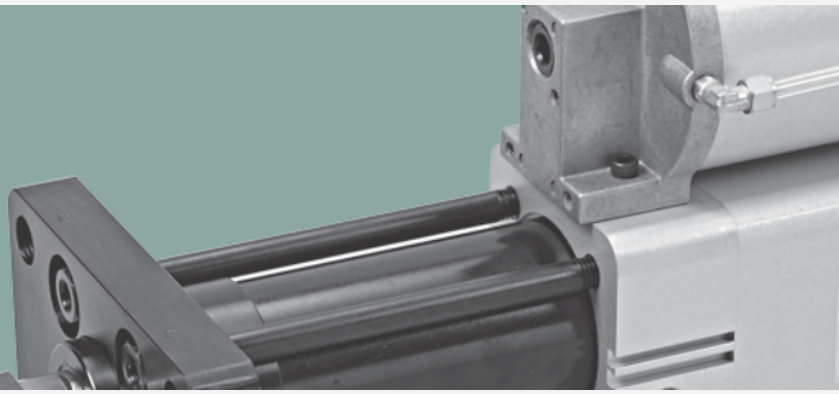

Booster Cylinder Series

Patent No.: ZL201120286320.X / M443778 / ZL201220493137.1

◎Output 1.8T~15T / **APT2**

◎Output 19T~106T / **APT**

HINAKA

APT2 / APT Technical Information

APT2
New Booster Cylinder Model
Output 1,500kgf - 15,000kgf

APT
Booster Cylinder
Output 16,000kgf - 100,000kgf

Specifications Chart：

	APT2 **New Booster Cylinder Model**	APT **Booster Cylinder**
Working Pressure	0.2MPa~0.7MPa(2kgf/cm^2~7kgf/cm^2)of clean compressed air	
Transmission Oil	CPC-R32 ISO VG32 viscosity grade or similar	
Temperature	0℃~60℃	
Stroke	Total stroke (First stage invalid + Pressure) - 50,100,150,200,250,300	Stroke pressure - 5,10,15,20
Buffering Function	Rear stroke of pneumatic cylinder with adjustable cushion available; effective stroke 15mm.	None
Mounting	FA Type	

Theoretical Output Chart：

	Boosting Output kgf			**First Stroke High-Speed Low Pressure Output**			**Return Stroke Output**			**Hydraulic Pressure kgf**		
Specifications	4kgf/cm^2	5kgf/cm^2	6kgf/cm^2	4kgf/cm^2	5kgf/cm^2	6kgf/cm^2	4kgf/cm^2	5kgf/cm^2	6kgf/cm^2	4kgf/cm^2	5kgf/cm^2	6kgf/cm^2
APT2												
10018	1,256	1,570	1,884	201	251	301	162	203	244	25	31	38
10025	1,640	2,051	2,461							33	41	49
10035	2,233	2,791	3,349							44	56	67
1005	4,005	5,006	6,008							80	100	120
1008	5,024	6,280	7,536				137	172	206	100	125	150
1013	7,850	9,812	11,775							156	195	234
1015	10,253	12,816	15,379							204	255	306
APT												
1619	12,861	16,077	19,292	314	393	471	215	269	323	164	205	246
1630	20,096	25,120	30,144							256	320	384
2047	31,481	39,352	47,222	707	883	1060	565	678	791	178	222	267
2067	45,216	56,520	67,824							256	320	384
20106	20,649	88,312	105,975							400	500	600

APT2 / APT Ordering Guidelines

Ordering Guidelines

APT2 - P - 10 035 M 200 N 10 A - 2R

1 Boosting Cylinder Model

APT2 : New Boosting Cylinder Type (1.8T~15T)
APT: Boosting Cylinder (19T~106T)

2 Design Category

P: Pre-pressurized Air Oil Contact Model
(First invalid stroke and pressurized stroke total two strokes)

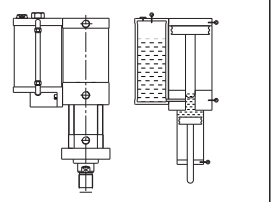

C:Direct Pressure Model
(Direct pressurized stroke without invalid stroke)

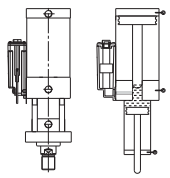

PC: Pre-pressurized Isolated Oil and Gas Pouch Model
(First invalid stroke and pressurized stroke total two strokes)

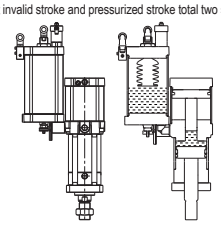

3 Pneumatic Cylinder Rear Bore Size (APT without rear bore)

10: ø100

4 Output Tonnage

When compressed air is 0.6Mpa(6kgf/cm^2), output is about 3.5 Tons
(Compare Theoretical Output Table)

5 Sensor (Cylinder section)

M:With magnet
N:Without magnet

6 Total Stroke (First invalid stroke + booster)

7 Sensor (Hydraulic cylinder section)

M:With magnet
N:Without magnet

8 Booster Stroke (high output stroke)

※ 8T (8T and above) without magnetic ring

9 Mounting

None: Standard type
A: Isolated oil tank type
R:Custom rod end type
F:Custom flange type

A:Isolated oil tank type

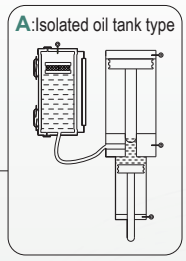

10 Number of Sensors

1R: 1Sensor
2R: 2Sensor

APT2 / APT Features / Circuit Diagram

Feature Description：

- Can be used for high frequency site operations. With patented segregated air and oil oil tube design; absolutely no oil mist production and stable output.
- No oil leakage and pollution free.
- Very little consumption of working oil reduces refills.
- Without the assistance of any hydraulic system, only 0.2MPa~0.7MPa of clean compressed air is needed to drive and generate high output. Additionally, controls are similar to pneumatic cylinders, reducing cost and space, light weight, and simple to operate.
- Modular design, simple and convenient assembly, streamlined neat appearance.
- Simple and small structure and small dimension, internal design for high speed transmissions.
- Oil pressurization is smooth with no impact, wide adjustable output range, non segmented adjustment.
- The applicable field includes welding, high pressure tests, bending, stamping, correction, cutting, riveting, high output pressurizing, etc.
- Control circuit must use air pressure solenoid valve and its components.

Pre-Pressurized Booster Cylinder Operation and Circuit Diagram:

Control all exhaust holes (3,5) of APT2/APT solenoid valves and use three-way tube to concentrate oil to collector (cup); achieves oil collection function.
Oil collector (cup) must be cleaned regularly.

1.First low pressure stroke

Air pressure source enters mist converter from P3, which causes hydraulic piston to move forward quickly. First low pressure stroke is by pneumatic force.

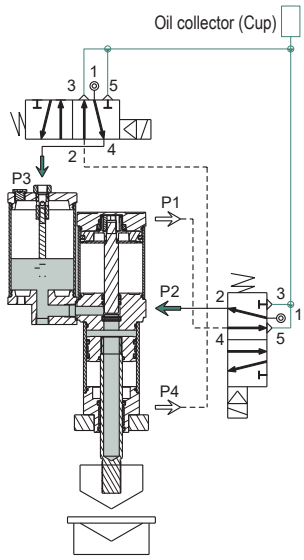

2.Prepare to start pressurized stroke

The first low pressure stroke stops after contacting the object, air pressure source input at P1, prepared to start the booster stroke.

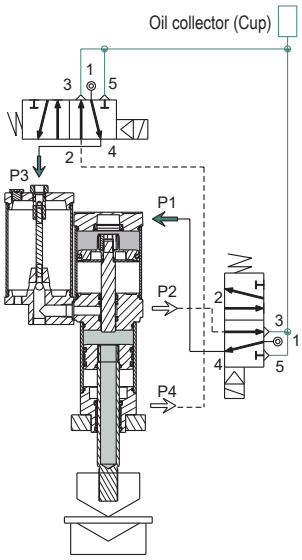

3.Booster stroke

The pneumatic source is fed by P1 air intake, causing the pneumatic cylinder to enter the hydraulic cylinder, compressing the liquid inside the cylinder and driving the hydraulic cylinder to generate a high-pressure stroke.

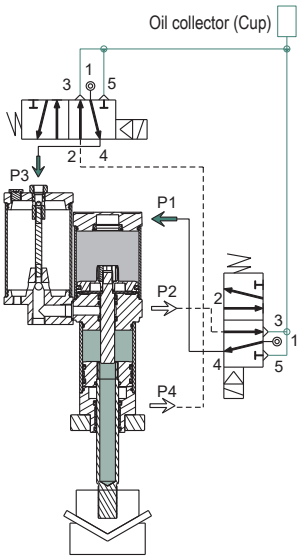

4.High speed low pressure return stroke

When processing action is completed, the air pressure source makes the hydraulic cylinder and pneumatic cylinder quickly return to the origin by P2 and P4 intake. Return force is pneumatic.

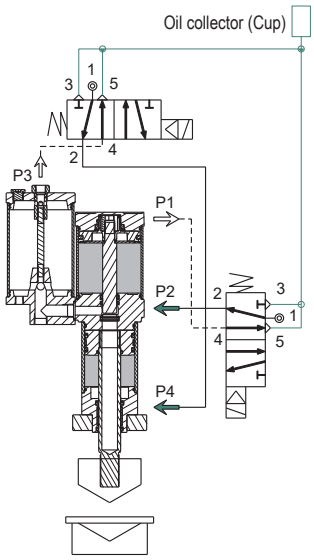

Booster Cylinder Direct Pressure Operation and Circuit Diagram :

1.Prepare to start pressurized stroke

Without the first stage of the low pressure stroke, the direct air pressure source is pumped from P1, and the pressurized stroke is ready to start.

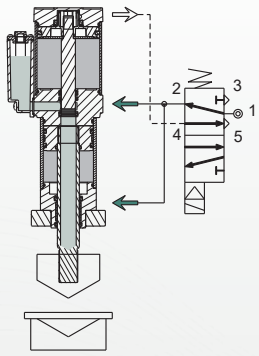

2.Pressurized stroke

The pneumatic source is fed by P1 air intake, causing the pneumatic cylinder to enter the hydraulic cylinder, compressing the liquid inside the cylinder and driving the hydraulic cylinder to generate a high-pressure stroke.

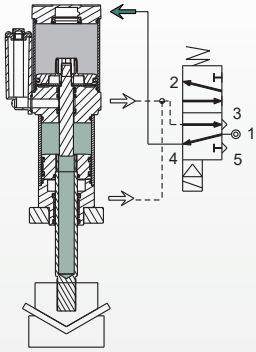

Example of Booster Cylinder Press Circuit :

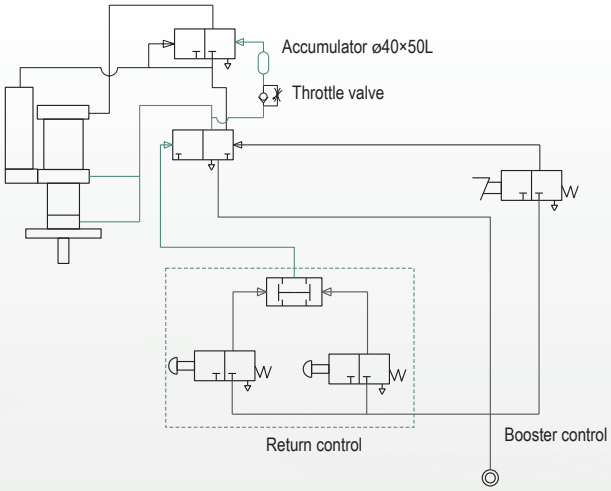

Special Installation Instructions：

Rod Installed Vertically

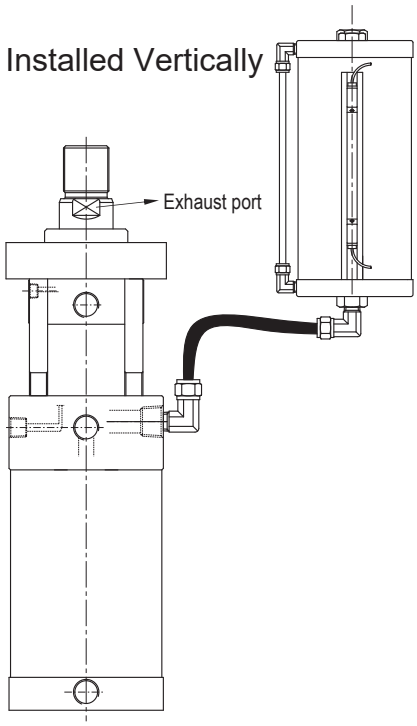

Rod Installed Horizontally

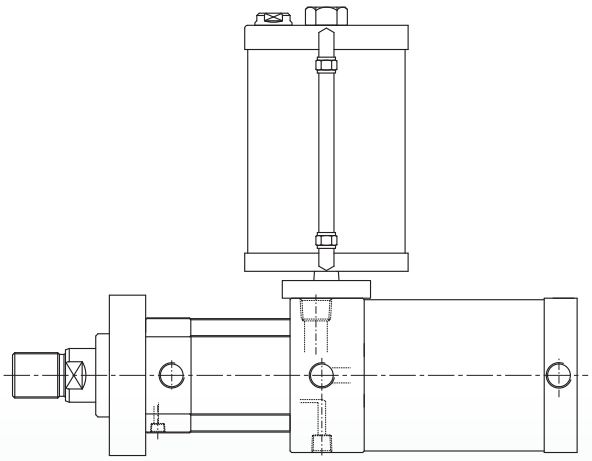

- When installing and using the axial rod horizontally or vertically, please make a special note and discuss it with the technical department.

APT2-P (1.8T~5T)

APT2-P Pre-pressurized Air Oil Contact Model (1.8T~5T)

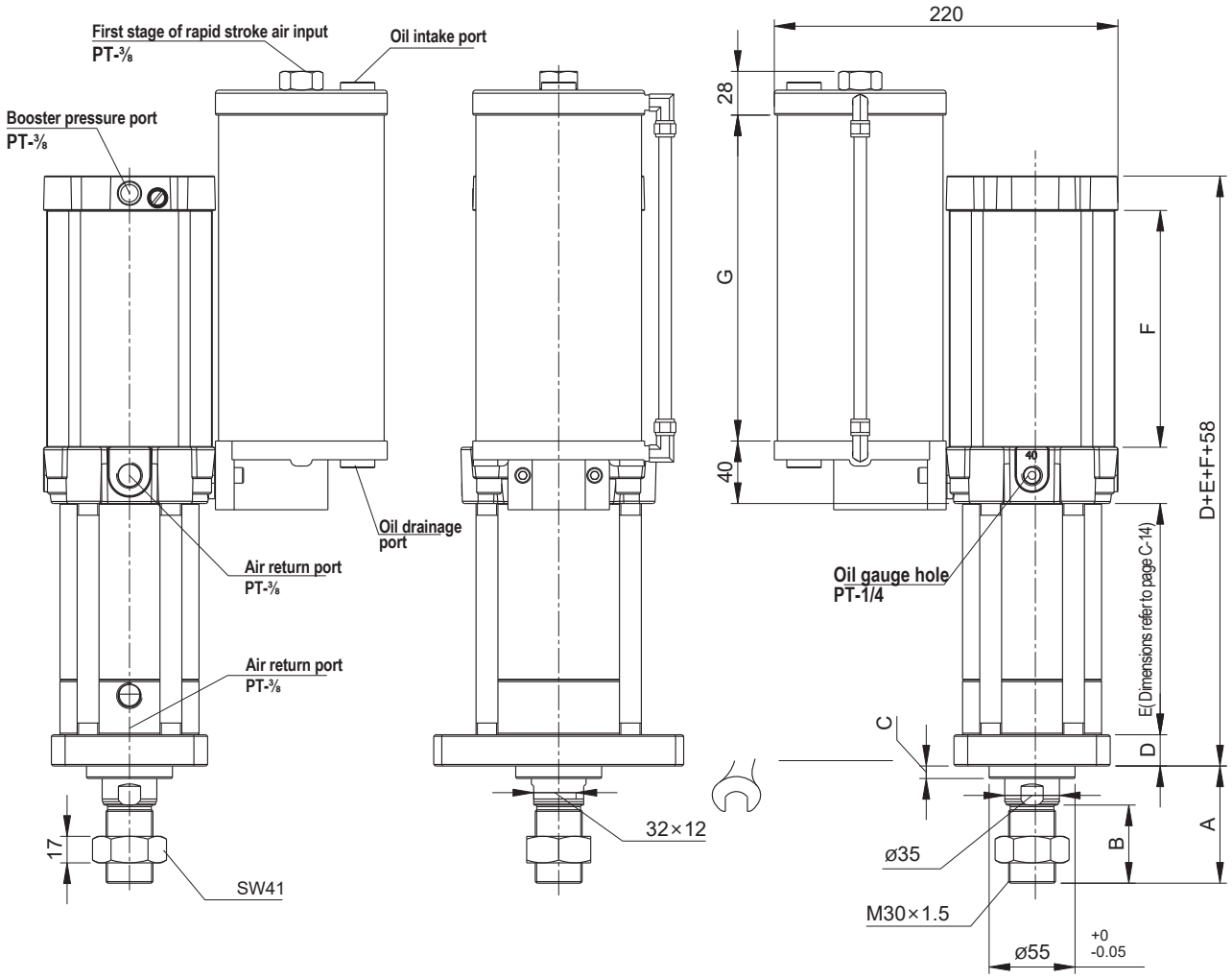

Type \ Dimensions \ Booster Stroke		05	10	15	20
10018	F	77	97	117	137
10025		83	109	135	161
10035		93	128	164	199
1005		121	184	248	311

Type : 10018~1005

Total Stroke	50	100	150	200	250	300
G Oil Tank Length	197	229	261	293	325	357

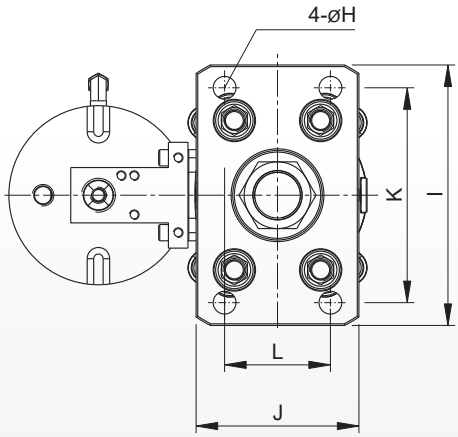

Type \ Dimensions	A	B	C	D	øH	I	J	K	L
10018	75	50	8	20	14	160	100	132	65
10025									
10035									
1005	90	55	3	25	17	180	118	155	87

APT2-P Pre-pressurized Air Oil Contact Model (1.8T~5T)

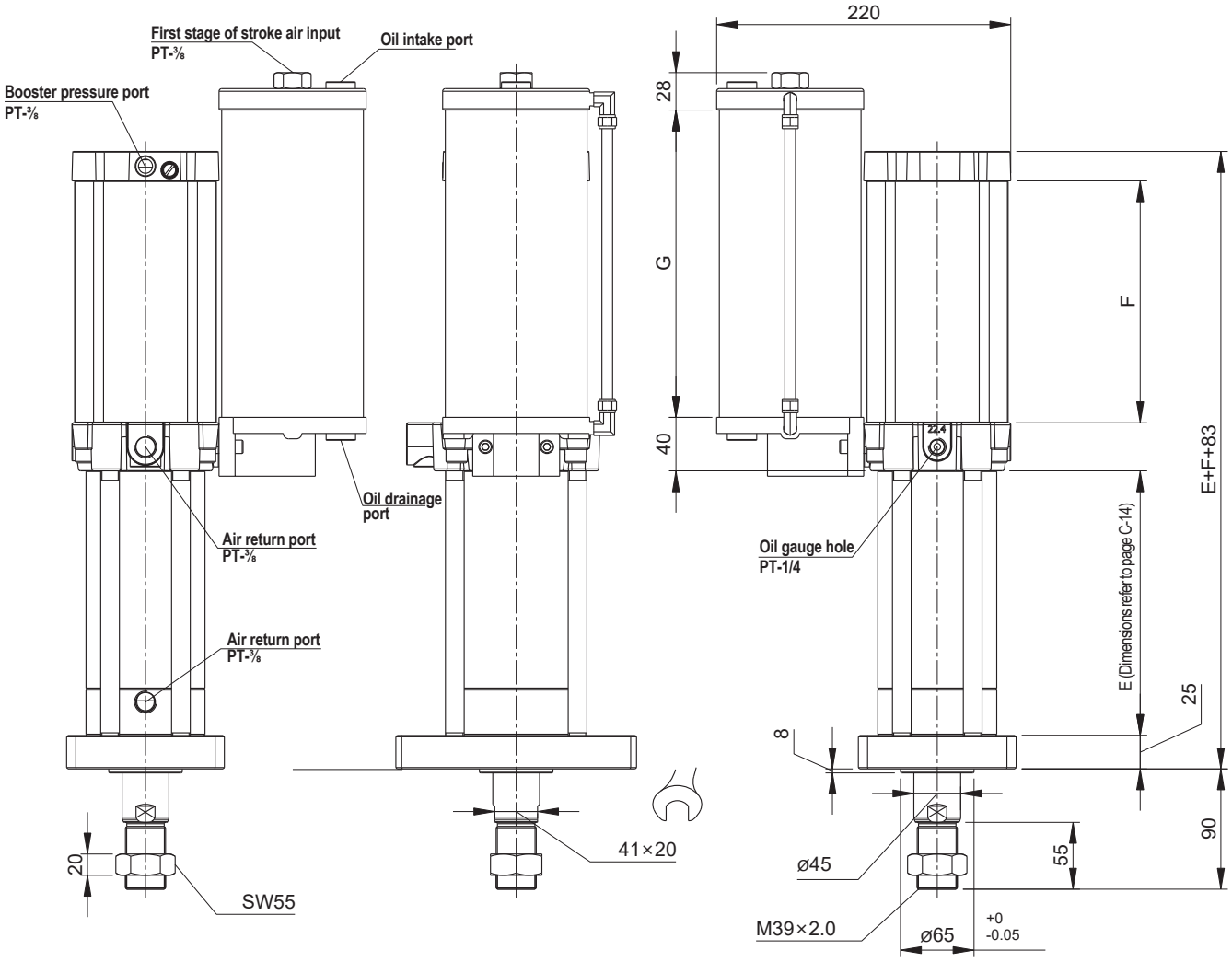

Dimensions / Type \ Booster Stroke		05	10	15	20
1008	F	137	217	297	377
1013		185	310	435	560
1015		223	386	549	712

Type :1008~1015

Total Stroke	50	100	150	200	250	300
G Oil Tank Length	197	229	261	293	325	357

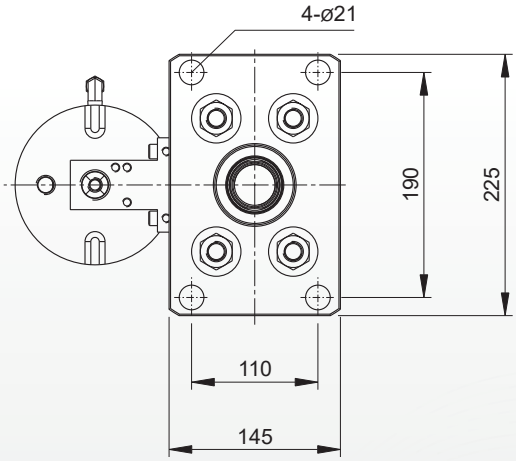

APT2-PC（1.8T~5T）

APT2-PC Pre-pressurized Isolated Oil and Gas Pouch Model (1.8T~5T)

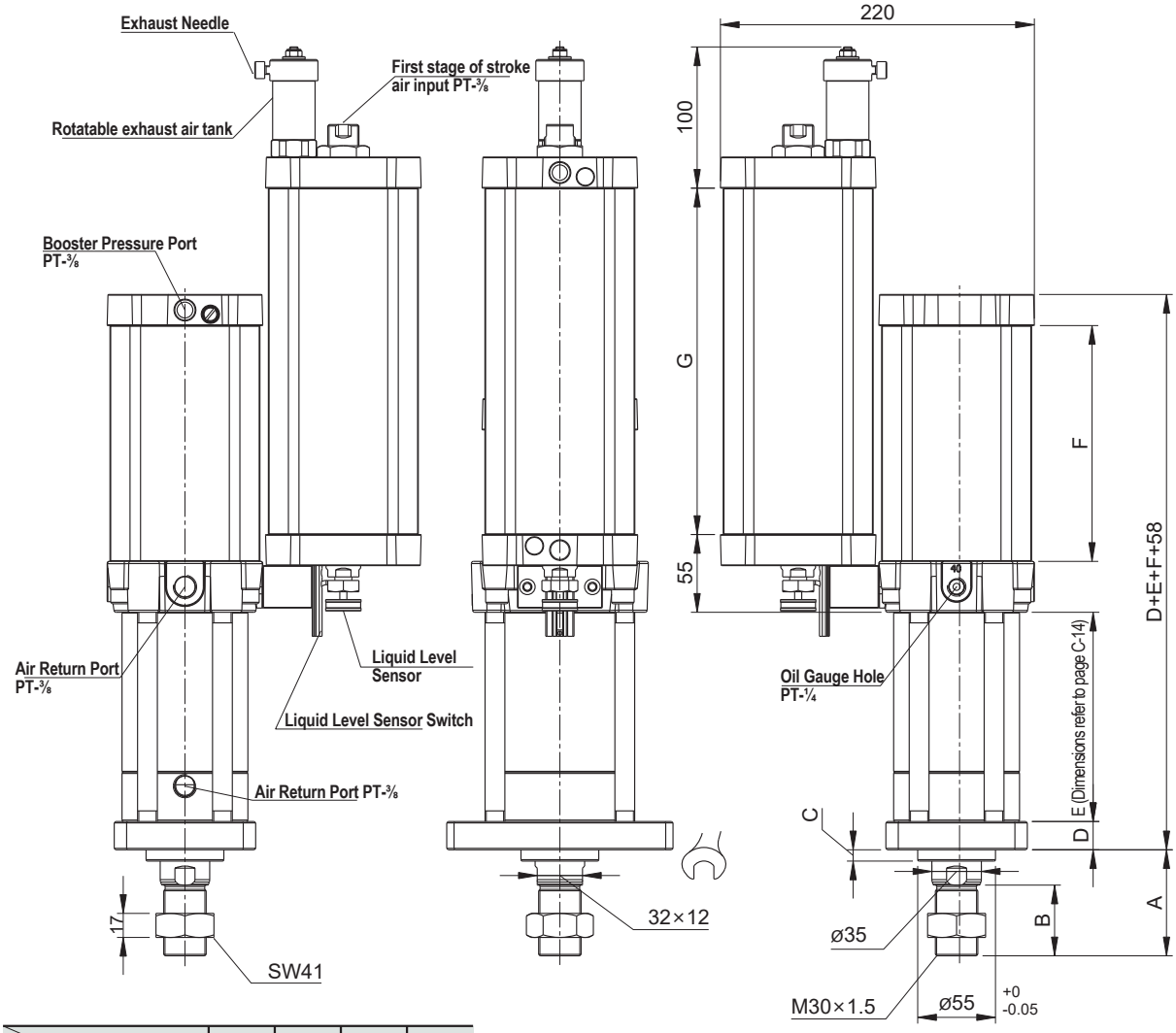

Type \ Dimensions \ Booster Stroke		05	10	15	20
10018	F	77	97	117	137
10025		83	109	135	161
10035		93	128	164	199
1005		121	184	248	311

Type:10018~1005 Total stroke of more than 200mm is the earlier model oil and gas isolation oil tank.

Total Stroke	50	100	150	200	250	300
G Oil Tank Length	245	245	290	290	325	357

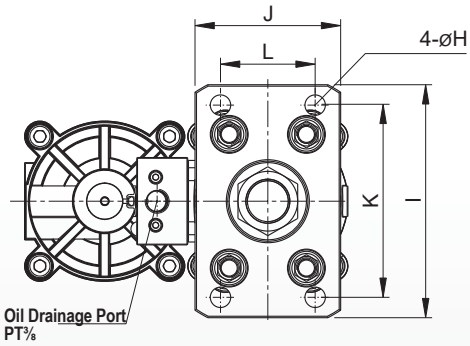

Type \ Dimensions	A	B	C	D	øH	I	J	K	L
10018	75	50	8	20	14	160	100	132	65
10025									
10035									
1005	90	55	3	25	17	180	118	155	87

APT2-PC Pre-pressurized Isolated Oil and Gas Pouch Model (1.8T~5T)

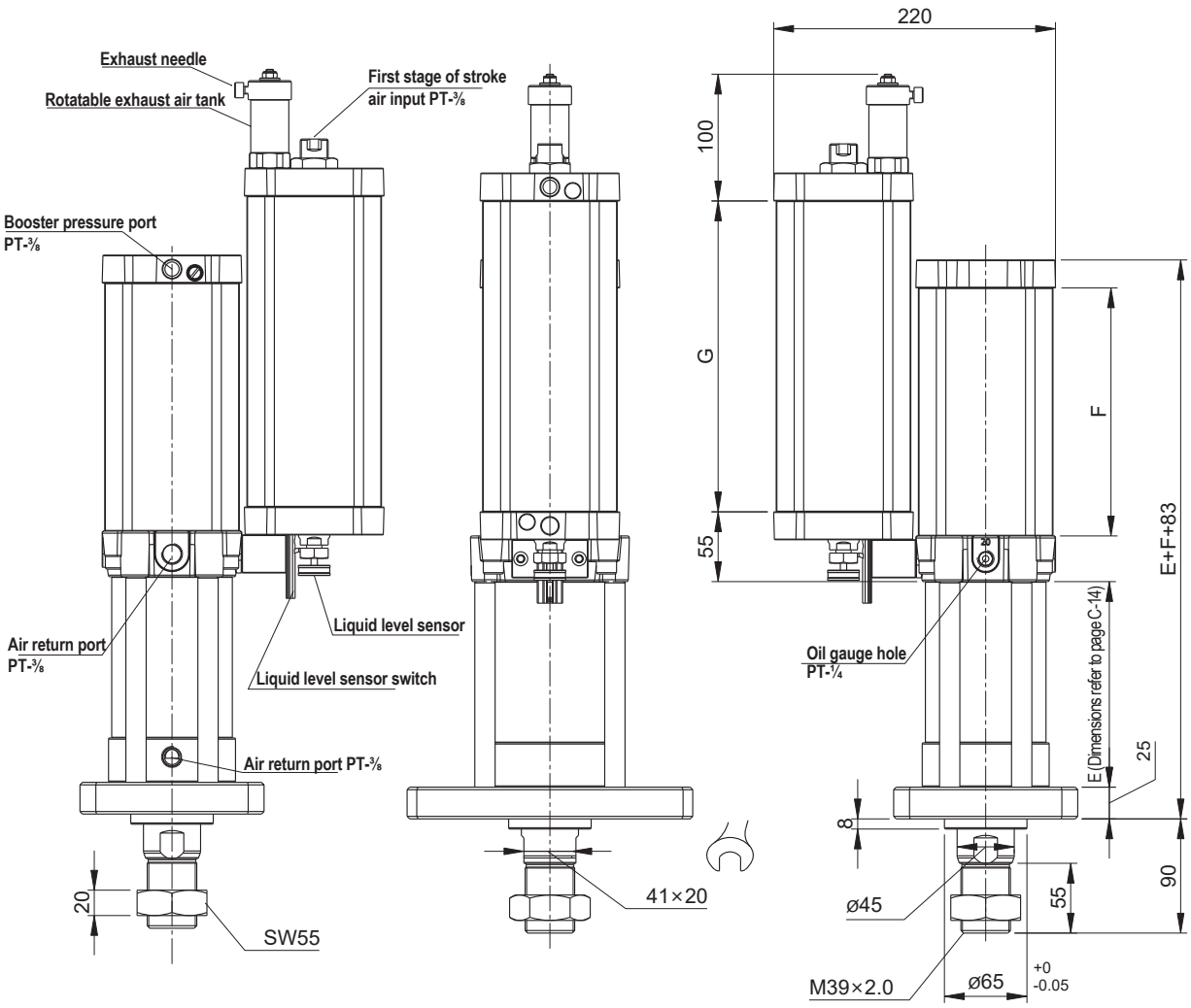

Dimensions / Type \ Booster Stroke		05	10	15	20
1008	F	137	217	297	377
1013		185	310	435	560
1015		223	386	549	712

Type：10018~1005 Total stroke of more than 200mm is the earlier model oil and gas isolation oil tank

Total Stroke	50	100	150	200	250	300
G Oil Tank Length	245	245	290	290	325	357

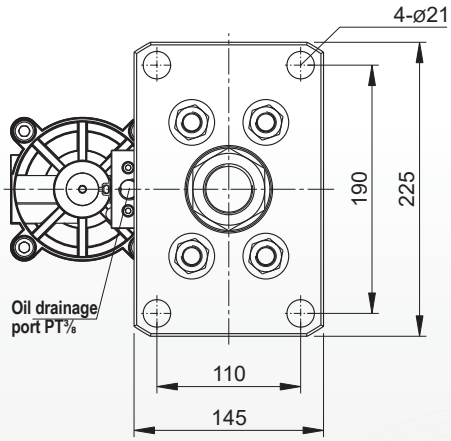

APT2-C Direct Pressure Type (1.8T~5T)

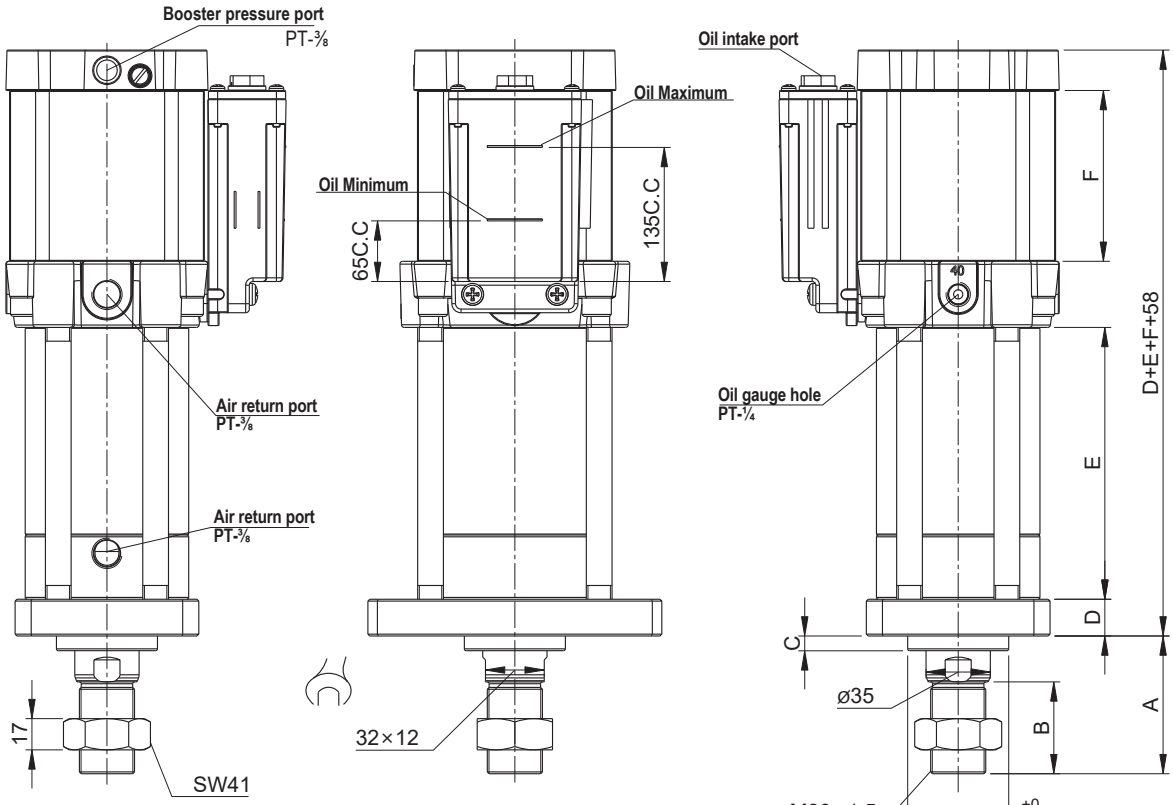

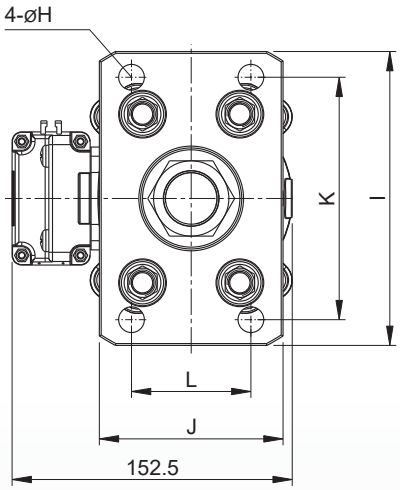

Dimensions / Type		Booster Stroke 05	10	15	20
10018	F	77	97	117	137
10025		83	109	135	161
10035		93	128	164	199
1005		121	184	248	311

Dimensions / Type		Booster Stroke 05	10	15	20
10018	E	※118	※138	※158	※178
10025		※124	※150	※176	※212
10035		※133	※169	※205	※241
1005		103	108	※163	※218

※ Indicates the total stroke combined with an extra extended boost stroke, specifying a special length.

Total Stroke	50	100	150	200	250	300
G Oil Tank Length	197	229	261	293	325	357

Dimensions / Type	A	B	C	D	øH	I	J	K	L
10018	75	50	8	20	14	160	100	132	65
10025									
10035									
1005	90	55	3	25	17	180	118	155	87

HINAKA
HINAKA Fluid Power Co., Ltd
Scrupulosity, Specialty, Sincerity, Satisfactory

APT2-C Direct pressure (8T~15T)

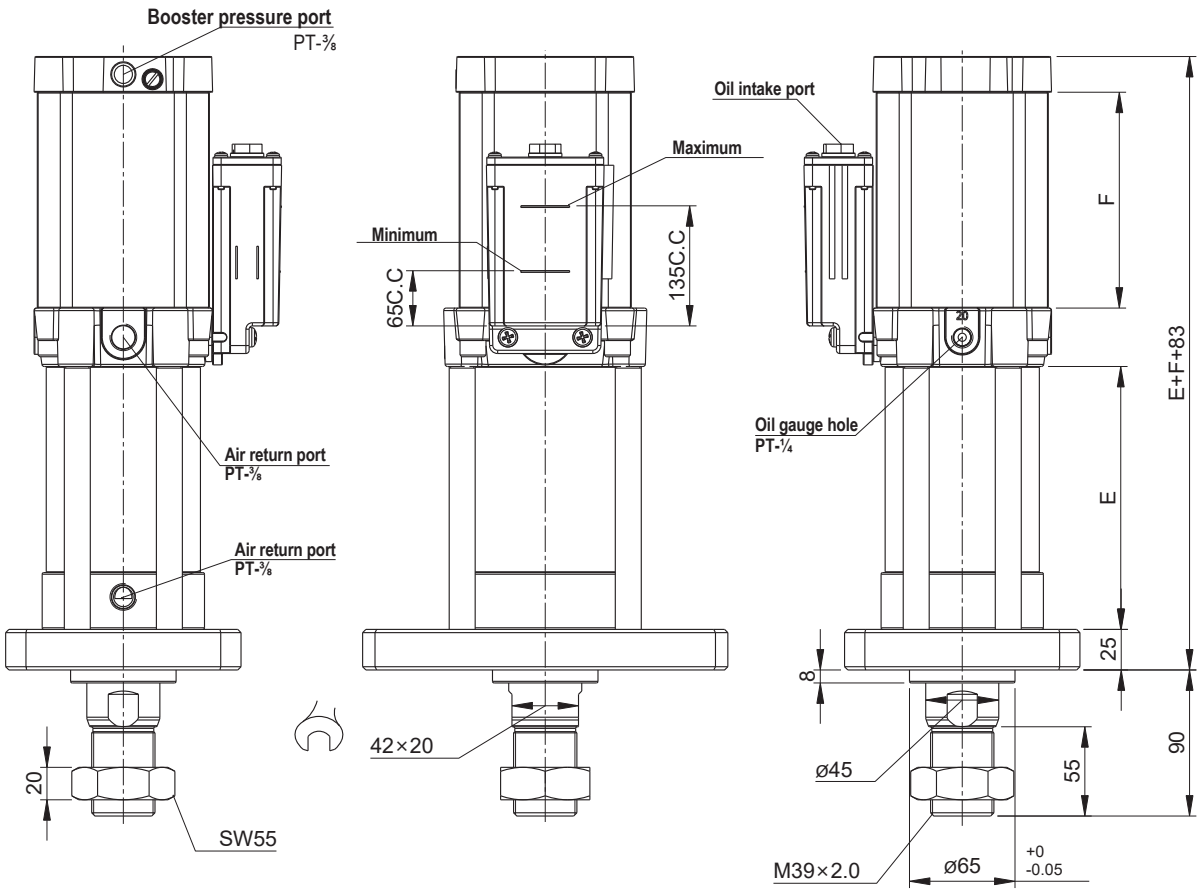

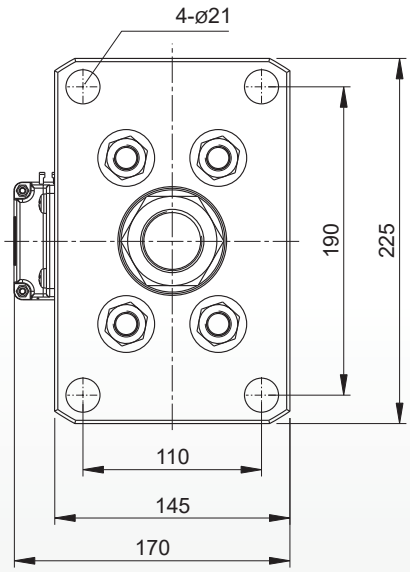

Dimensions / Type \ Booster Stroke		05	10	15	20
1008	F	137	217	297	377
1013		185	310	435	560
1015		223	386	549	712

Dimensions / Type \ Booster Stroke		05	10	15	20
1008	E	117	※142	※202	※267
1013		117	※212	※332	※452
1015		※137	※292	※447	※602

※ Indicates the total stroke combined with an extra extended boost stroke, specifying a special length.

Type:10018~1005 Total stroke of more than 200mm is the earlier model oil and gas isolation oil tank.

Total Stroke	50	100	150	200	250	300
G Oil Tank Length	245	245	290	290	325	357

BPTC Feature Description

Feature Description：

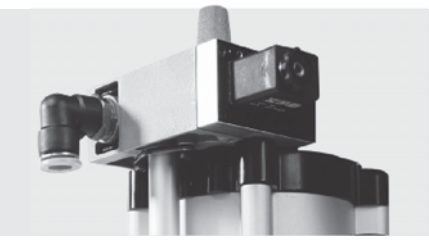

Modular Design.

Control valve connected by outer wall mount , interior cylinder and tubing allows for larger gas flow with a simple and pleasant appearance; significantly lowers installation and tubing costs.

Oil Cup Liquid Level Sensor.

Flat oil replenishing dispenser fits flush on the on outer wall making it stable, leak proof, doesn't occupy extra space, and won't twist. External sensor linked to inner float detects oil level and can specify advanced computer settings to prevent clamp impact or unnecessary shutdown. Elegant sturdy oil proof assembly, impact resistant; transparent materials increase visibility.

Oil Cup Liquid Level Sensor

The operating speed frequency is fast.

Dynamic fast frequency tubing is modular, and the pneumatic duct is the best design for fluid transmission. The operating speed frequency is faster than the earlier model, and the return can be completed in 0.5 seconds.

④Careful Unclamping Cylinder Inner Seal Selection.

We choose the best seals by taking advantage of our many years of experience and doing extensive testing. Choosing the right seals decreases fuel consumption, prevents the need for frequent lubrication, and prevents environmental pollution due to oil leakage.

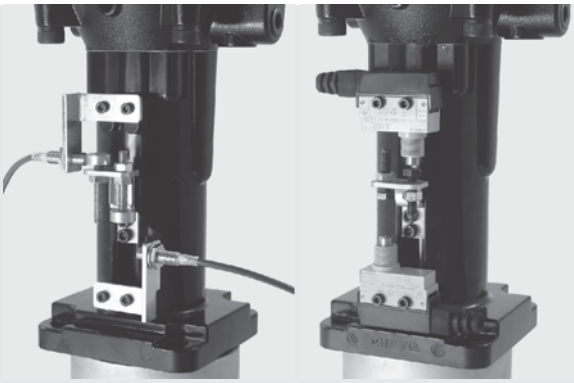

Precise positioning increases accuracy and speed.

Simple and sleek design doesn't easily loosen. Precise positioning can increase tool change accuracy and speed.

Enhance the convenience of installation.

To enhance installation convenience, the bottom FA plate can be equipped with adapters of various sizes according to customer needs, making it easier for customers to install.

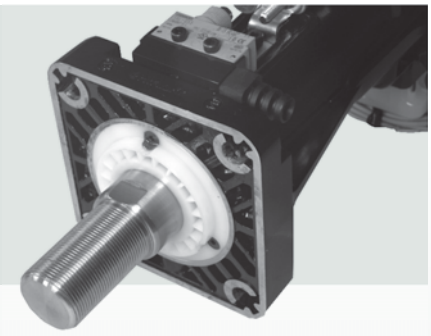

BPTC Modular : Direct Pressure

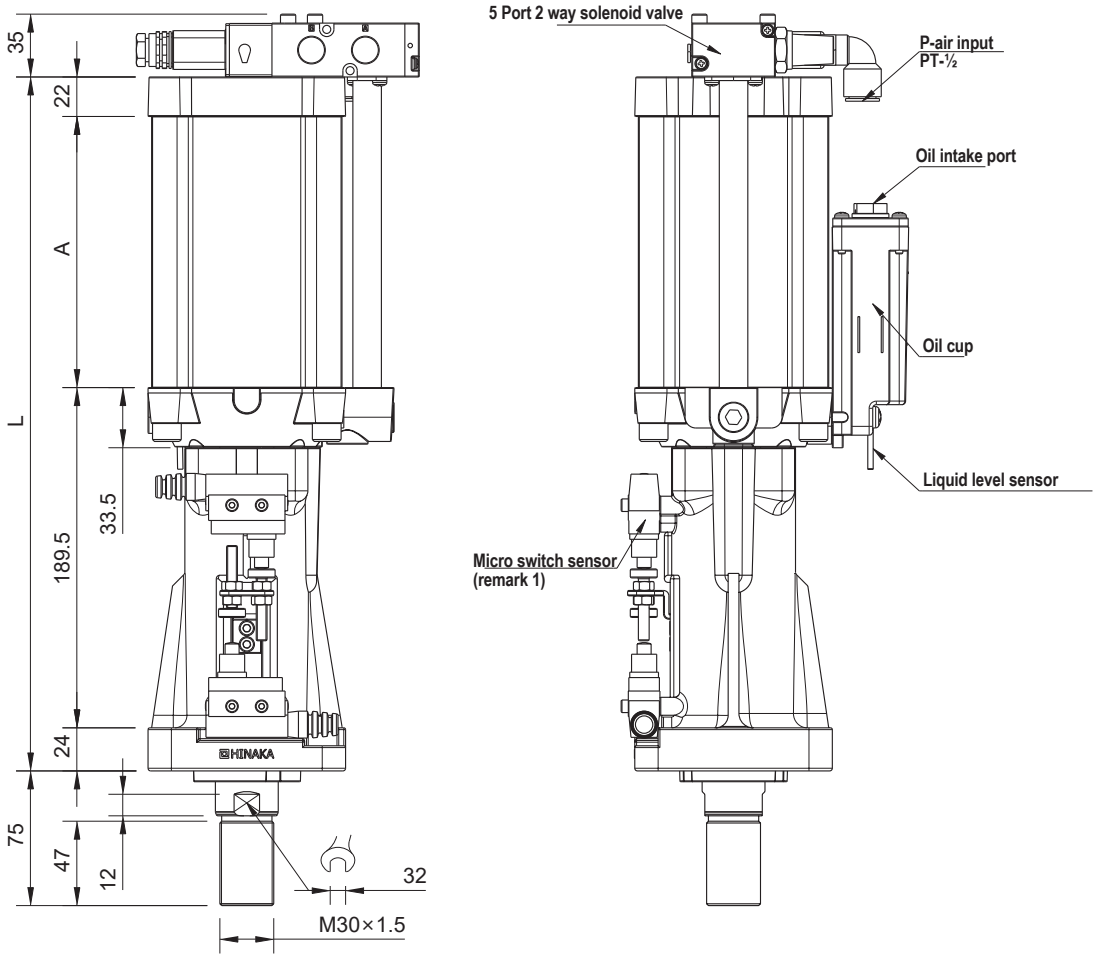

Unit : mm

Specifications	A	L	Theoretical Output(kgf)			Ratio
			4	5	6	
2.0T× ST13	103	339	1256	1570	1884	16
2.0T× ST15	111	347				
2.0T× ST17	119	355				
2.5T× ST13	116	352	1564	1956	2347	19.9
2.5T× ST15	126	362				
2.5T× ST17	136	372				
3.0T× ST13	132	367	1963	2453	2944	25
3.0T× ST15	145	381				
3.0T× ST17	157	382				

Specifications	A	L	Theoretical Output(kgf)			Ratio
			4	5	6	
3.5T× ST13	154	389	2423	3029	3634	30.8
3.5T× ST15	151	386				
3.5T× ST17	167	403				
4.5T× ST13	182	417	3066	3833	4600	39
4.5T× ST15	181	416				
4.5T× ST17	200	435				

● Remark 1. Proximity sensor is available.

E : Total Stroke (Unit:mm)

APT2- P Type PC Type

Type : 10018

Booster Stroke / E Total Stroke	05	10	15	20
50	148	148	※178	※178
100	198	198	198	198
150	248	248	248	248
200	298	298	298	298
250	348	348	348	348
300	398	398	398	398

Type : 10025

Booster Stroke / EE Total Stroke	05	10	15	20
50	148	148	※178	※201
100	198	198	198	198
150	248	248	248	248
200	298	298	298	298
250	348	348	348	348
300	398	398	398	398

Type : 10035

Booster Stroke / E Total Stroke	05	10	15	20
50	148	※168	※204	※239
100	198	198	198	※239
150	248	248	248	248
200	298	298	298	298
250	348	348	348	348
300	398	398	398	398

Type : 1005

Booster Stroke / E Total Stroke	05	10	15	20
50	148	148	148	※198
100	198	198	198	198
150	248	248	248	248
200	298	298	298	298
250	348	348	348	348
300	398	398	398	398

Type : 1008

Booster Stroke / E Total Stroke	05	10	15	20
50	162	162	162	※250
100	212	212	212	※250
150	262	262	262	262
200	312	312	312	312
250	362	362	362	362
300	412	412	412	412

Type : 1013

Booster Stroke / E Total Stroke	05	10	15	20
50	162	※212	※312	※437
100	212	212	※292	※417
150	262	262	262	※387
200	312	312	312	312
250	362	362	362	362
300	412	412	412	412

Type : 1015

Booster Stroke / E Total Stroke	05	10	15	20
50	162	※262	※425	※588
100	212	※232	※395	※558
150	262	262	※365	※528
200	312	312	312	※475
250	362	362	362	※425
300	412	412	412	412

※ Indicates booster stroke with total stroke is too long, which is an extended length.

APT-P Pre-pressurized Air Oil Contact Model (19T~106T)

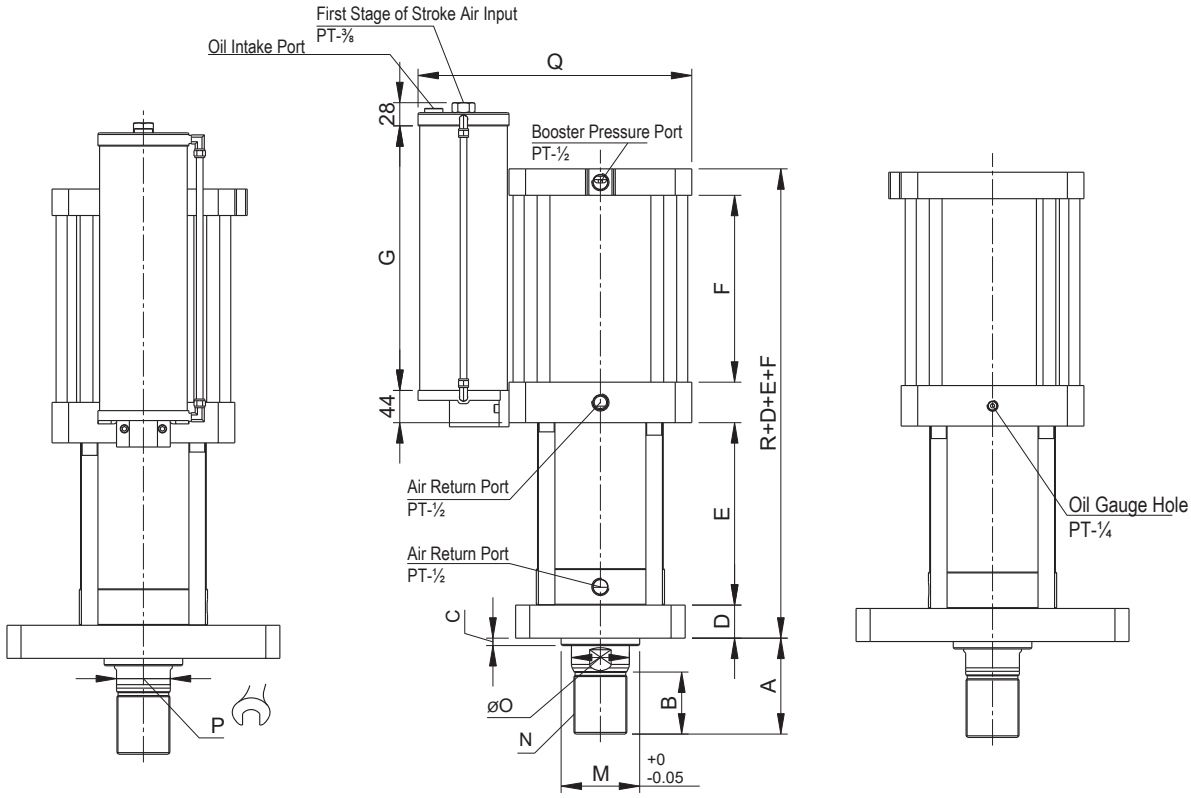

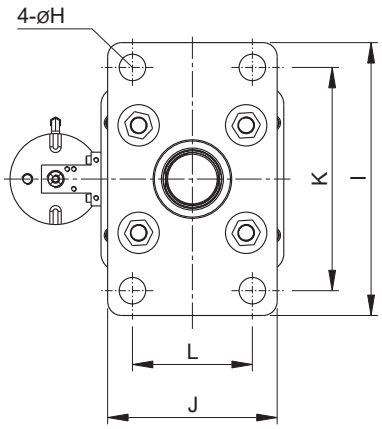

F Booster Stroke	05	10	15	20
1619	119	199	279	359
1630	164	289	414	539
2047	178	303	428	553
2067	233	413	593	773
20106	334	615.5	897	1178

E Total Stroke	50	100	150	200	250	300
1619	166.6	216.6	266.6	316.6	366.6	416.6
1630						
2047	170.6	220.6	270.6	320.6	370.6	420.6
2067						
20106						

G Oil Tank Length	50	100	150	200	250	300
1619	215	265	315	365	415	465
1630						
2047	278	390	503	615	730	840
2067						
20106						

	A	B	C	D	øH	I	J	K	L	M	N	øO	P	Q	R
1619	90	55	9	31	26	260	165	215	115	80	M48×1.5	56	50	290	79
1630															
2047	116	75		50	42	330	205	270	145	110	M64×2.0	90	85	331	81
2067															
20106															

APT-PC Pre-pressurized Isolated Oil and Gas Pouch Model（19T~106T）

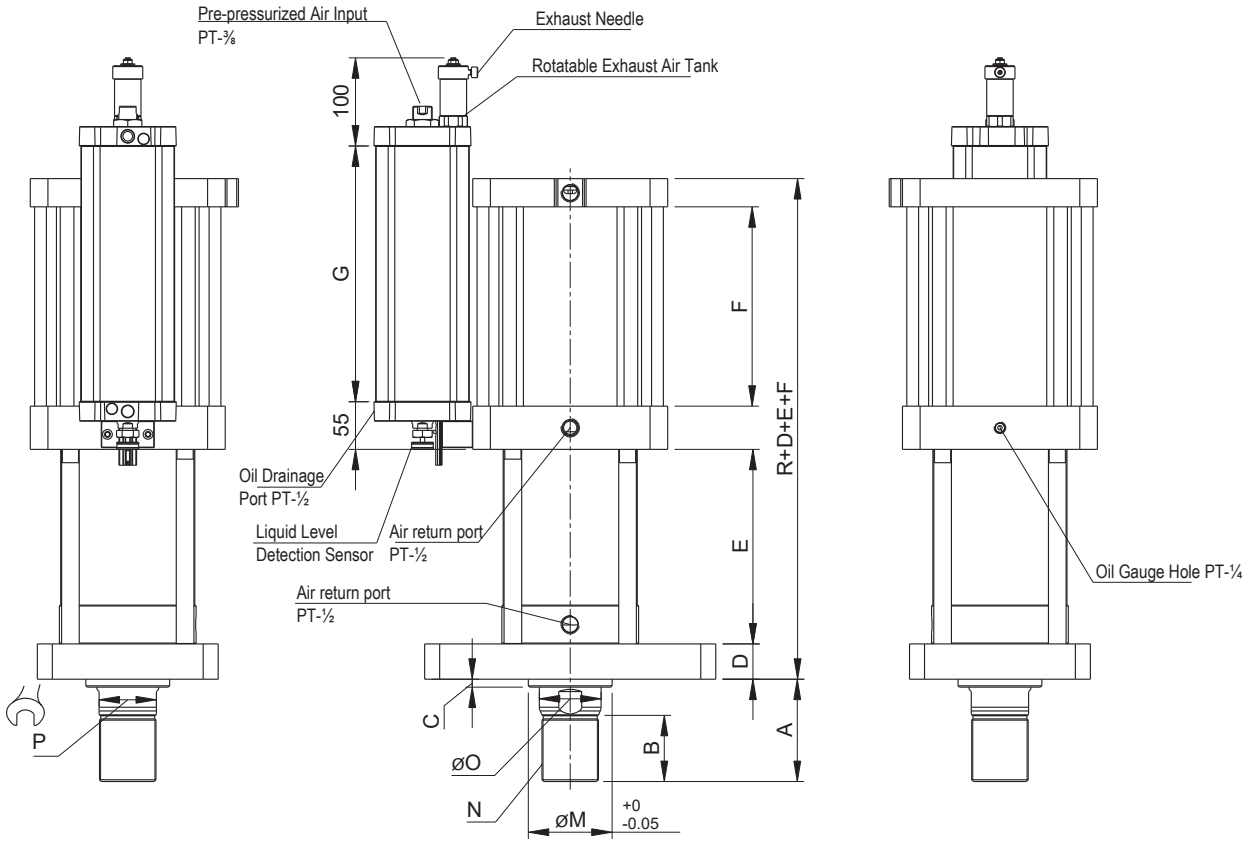

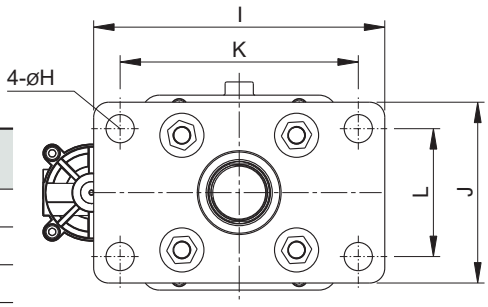

F Booster Stroke	05	10	15	20
1619	119	199	279	359
1630	164	289	414	539
2047	178	303	428	553
2067	233	413	593	773
20106	334	615.5	897	1178

E Total Stroke	50	100	150	200	250	300
1619	166.6	216.6	266.6	316.6	366.6	416.6
1630						
2047	170.6	220.6	270.6	320.6	370.6	420.6
2067						
20106						

Total stroke over 100mm indicates the use of an earlier model of the oil-gas isolated hydraulic cylinder.

Total Stroke	50	100
G Oil Tank Length	290	290

	A	B	C	D	øH	I	J	K	L	M	N	øO	P	Q	R
1619	90	55	9	31	26	260	165	215	115	80	M48× 1.5	56	50	300.5	79
1630															
2047	116	75		50	42	330	205	270	145	110	M64× 2.0	90	85	341.5	81
2067															
20106															

APT2-C Direct Pressure Model (19T~30T)

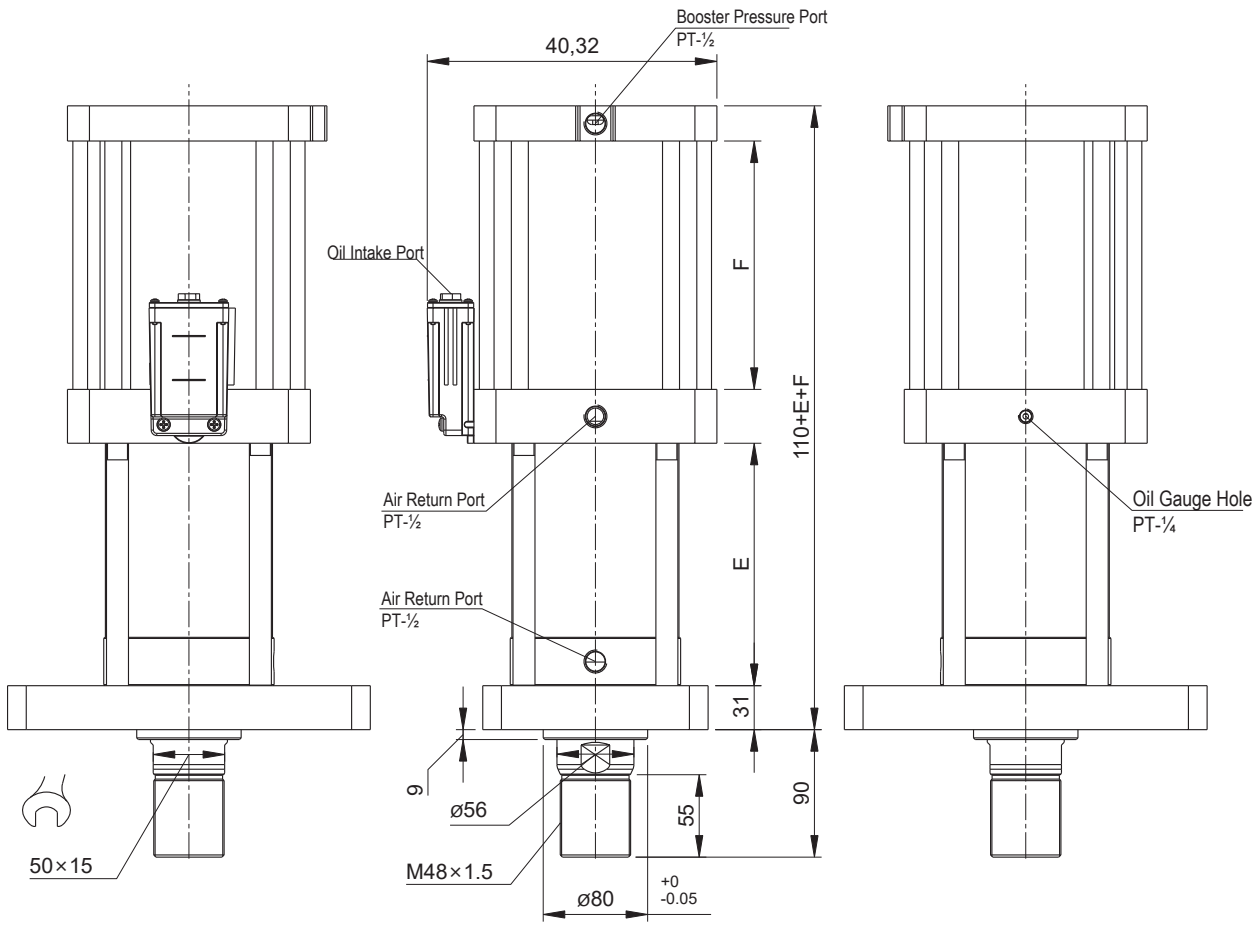

Oil Cup Capacity

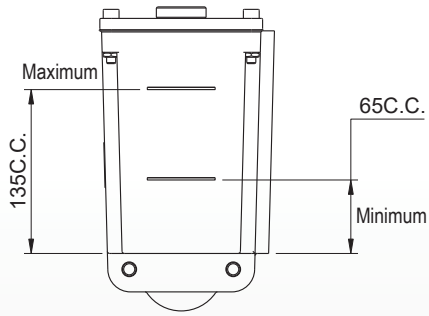

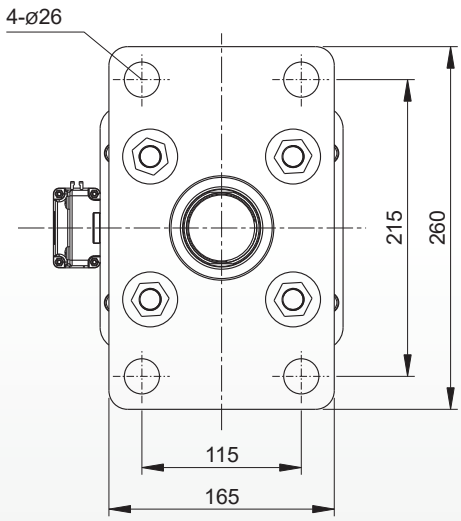

For F Dimensions refer to P-type

E Total Stroke	05	10	15	20
1619	121.6	126.6	261.6	386.6
1630				