3 Boosting Devices

Booster Cylinder Series

◎ **Ratio** 6~39 / **APF2**

◎ **Ratio** 64~100 / **APF**

HINAKA

APF2 / APF Technical Information

APF2
New Booster Model

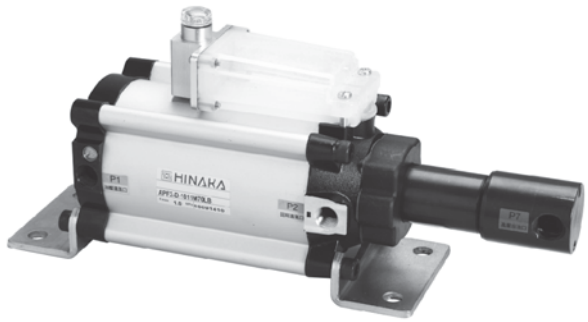

APF
Booster

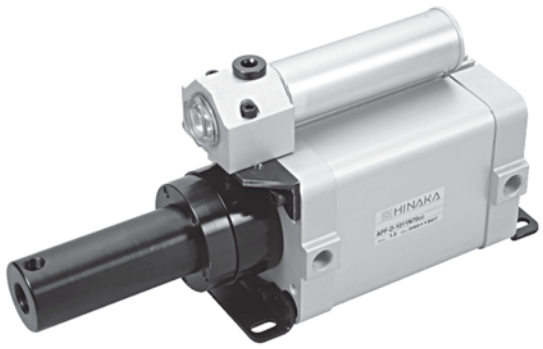

Specifications：

	APF2New Booster Model	APFBooster
Working Pressure	0.2MPa~0.7MPa(2kgf/cm^2~7kgf/cm^2) of clean compressed air	
Transmission Oil	CPC-R32 ISO VG32 viscosity grade or similar	
Temperature Range	0℃~60℃	
Output Volume	70C.C. 120C.C. 200C.C. ※Other output volume can be customized.	
Buffering Function	Rear pneumatic cylinder has adjustable cushioning for the return stroke, with an effective cushioning stroke of 15mm	None
Mounting	FA Type, FB Type, LB Type ※Piston with magnetic ring optional	LB Type

APF2 / APF Ordering Guidelines

Ordering Guidelines

APF2 - P - 10 12 M 120 LB - 2R

1 Booster Model

APF2: New Booster Model
APF: Booster

2 Design Category

P: Pre-pressurized air oil contact model
(Two stage stroke with both low-pressure stroke and boosting stroke)

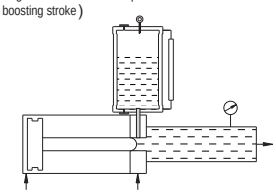

Suitable for use in low-frequency operating environments, approximately less than 6 reciprocations per minute; there may be a slight amount of oil generated during exhaust.

PC: Pre-pressurized Oil-Gas Isolation Type
(Two stage stroke consisting of low-pressure stroke and boost stroke)

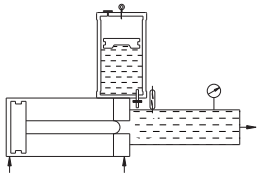

Suitable for use in high-frequency operating environments, applicable for more than 6 reciprocations per minute; oil-gas is completely isolated during oil discharge or return, and there is absolutely no oil mist generated.

PB: Isolated Oil Tank Type

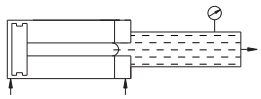

D: Direct pressure Model
(Direct pressure, single pressure stroke)

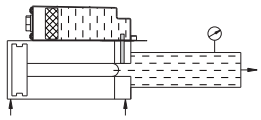

3 Rear end pneumatic cylinder bore diameter

10 : ø100

4 Ratio

12= 12.7 : 1

5 Sensor Device

(Pneumatic cylinder section)
M: With Magnet
N: Without Magnet

6 Output volume c.c.

7 Mounting

LBType

APF2

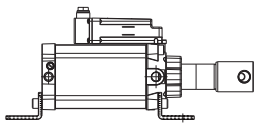

APF

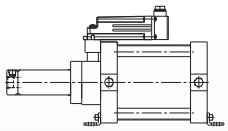

FAType

APF2

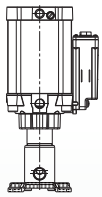

PB-Isolated Oil Tank Type

APF2/APF

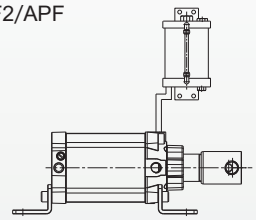

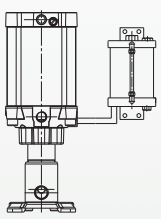

8 Number of Sensors

1R: 1 Sensor / **2R**: 2 Sensors

APF2 / APF Features / Circuit Diagram

Feature Description：

- Without the assistance of any hydraulic system, it can be driven by clean compressed air with a pressure of only 0.2MPa~0.7MPa, to generate high output force. The control method is similar to that of a pneumatic cylinder, which saves cost, space, reduces weight, and is easy to operate.
- The booster is separated from the working hydraulic cylinder and drives multiple working cylinders simultaneously.
- Oil-gas booster as the power source can replace a hydraulic power unit and achieve energy savings of up to 90%.
- Separating the booster from the working hydraulic cylinder provides great installation flexibility and doesn't take up much space.
- Drives multiple working hydraulic cylinders simultaneously.
- Working environment is free from oil pollution, noise, high-pitched sounds, and clutter free.
- Generates an oil pressure of 600kgf/cm^2 at an air pressure of 6kgf/cm^2, even at high pressures.
- Can be applied to high-pressure tasks such as workholding, high-pressure testing, riveting, stamping, punching, and shearing.
- Pneumatic oil-gas boosters can be of two types: direct pressure and pre-pressure, which makes the stroke range of the hydraulic cylinder (actuator) very wide.

Example of Usage and Control Circuit：

Control circuit diagram for a direct pressure booster

Control with a single solenoid valve

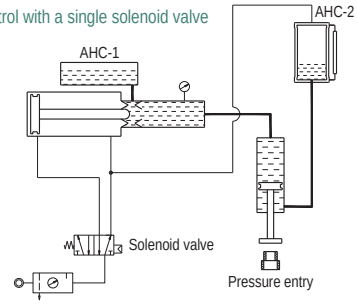

Control circuit diagram for a pre-pressure booster

Controlling circuit for driving multiple single-acting oil cylinders

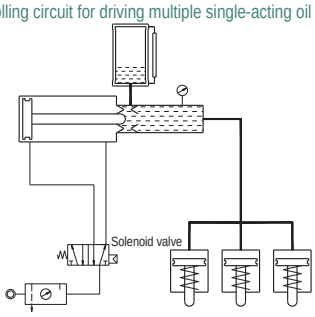

Direct-acting booster control circuit diagram

Control circuit for driving multiple oil cylinders with a booster

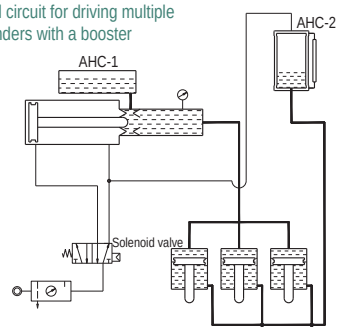

Control Circuit Diagram for Pre-pressurized Booster

1.Fast Movement with Low Pressure

When solenoid valve B is activated (ON),the air pressure will first drive the oil in the cylinder of the oil and gas converter AHC-1 to quickly push oil cylinder forward to the working position.

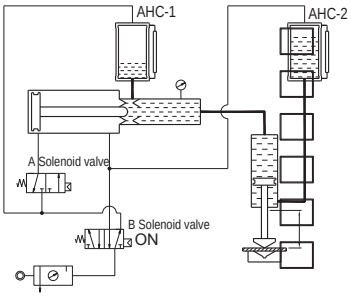

2.High-power Boosted Actuation

When the upper mold reaches the position of the workpiece, A solenoid valve is instantly turned on, causing the cylinder to move forward and boost pressure, injecting high-pressure oil into the cylinder to achieve a high-power boosting stroke and complete the machining action.

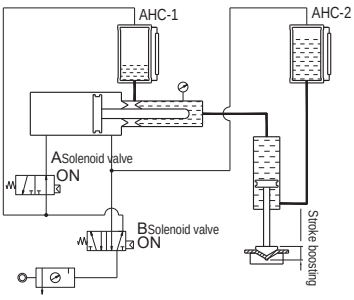

3.Low pressure fast return

After the machining operation is completed, turn off the AB solenoid valve to allow the compressed air to return rapidly to the booster front cover and the oil-to-air converter AHC-2, thereby completing the rapid return cycle of the booster and the hydraulic cylinder.

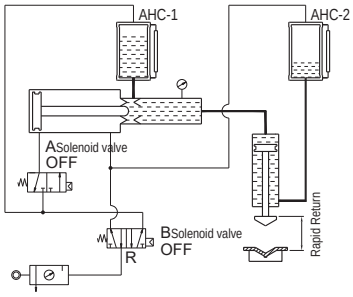

Pre-charged Boost Amplifier - Continuous Stroke Boost Actuation Control Circuit Diagram

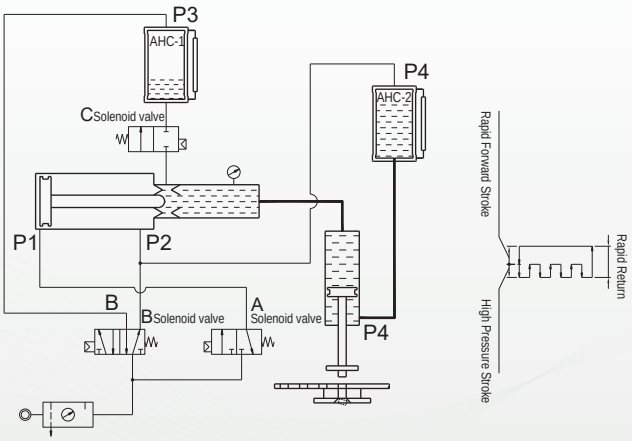

Continuous Stroke Boost Actuation Mode

Label	A	B	C	P1	P2	P3	P4
Origin	×	×	×	×	○	×	○
Rapid Advance	○	×	○	×	×	○	×
Intermediate Stop	×	×	×	×	○	×	○
Boost Advance	○	○	×	○	×	○	×
Boost Reverse	×	×	×	×	○	×	○
Return to Origin	×	×	○	×	○	×	○

Installation Instructions：

①APF2-D Direct Pressure Booster

Oil cup is adapted for horizontal release
Oil cup is adapted for vertical release

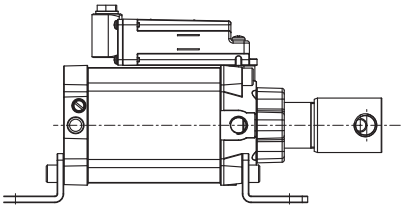

Horizontal type LB Model available for selection

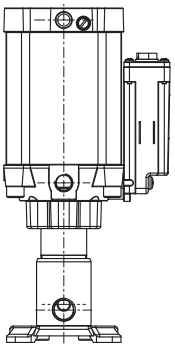

Vertical type FA Model available for selection

②APF2-PB Isolated Oil Tan Booster

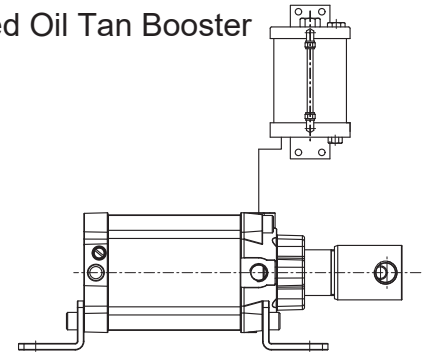

Horizontal type LB Model available for selection

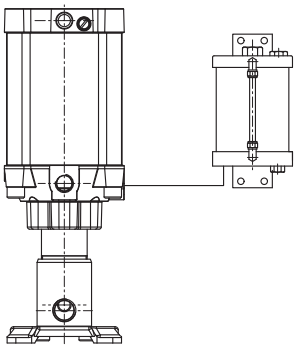

Vertical type FA Model available for selection

③APF2-P Pre-pressurized Booster

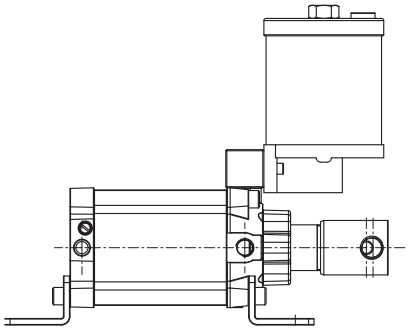

Horizontal type LB Model available for selection

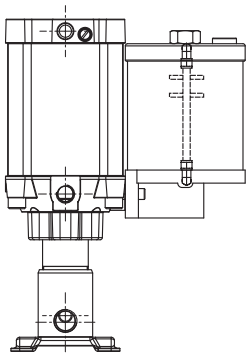

Vertical type FA Model available for selection

④APF2-PA Oil-Gas Isolation Booster

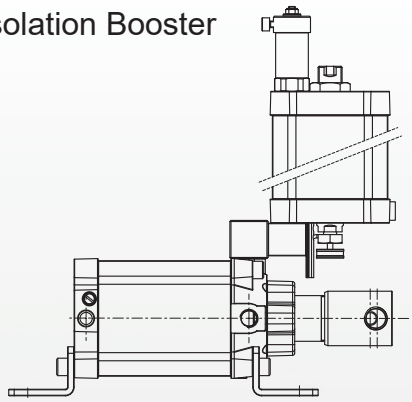

Horizontal type LB Model available for selection

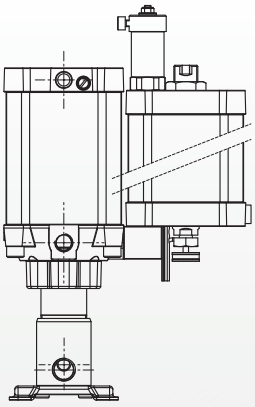

Vertical type FA Model available for selection

APF2-P

APF2-P Pre-pressurized Air Oil Contact Model

Horizontal Type

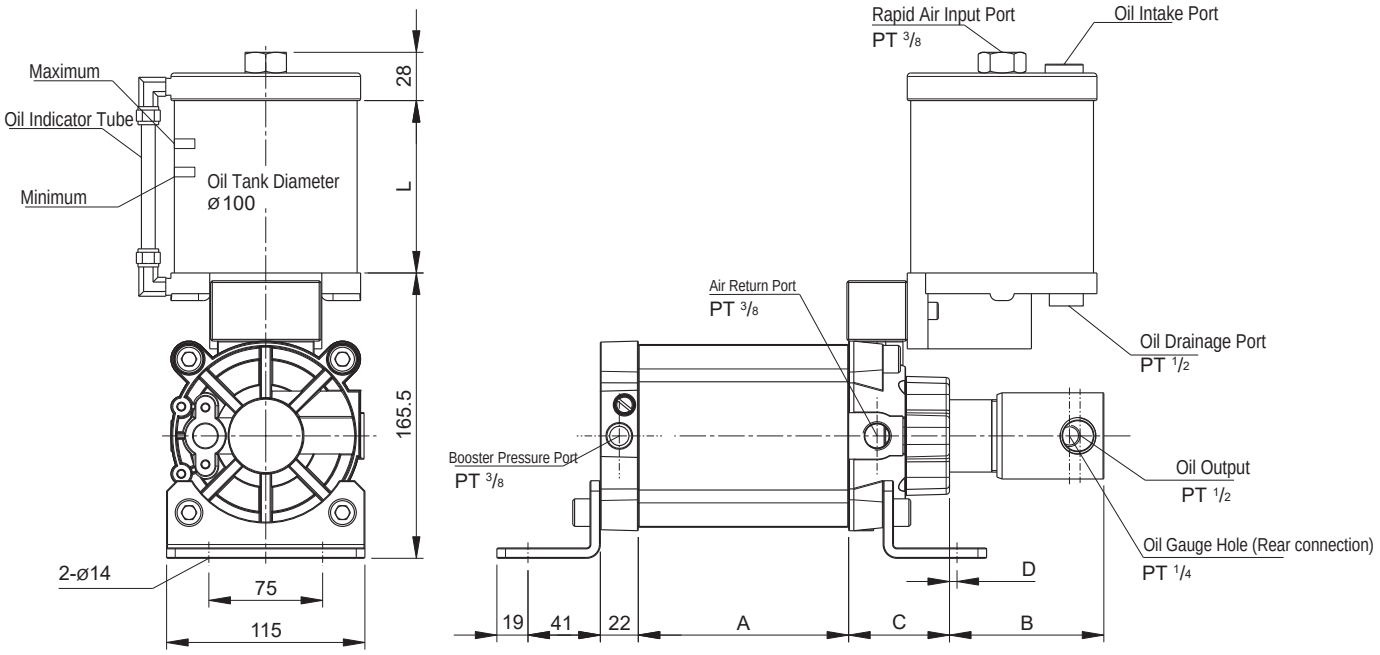

Vertical Type

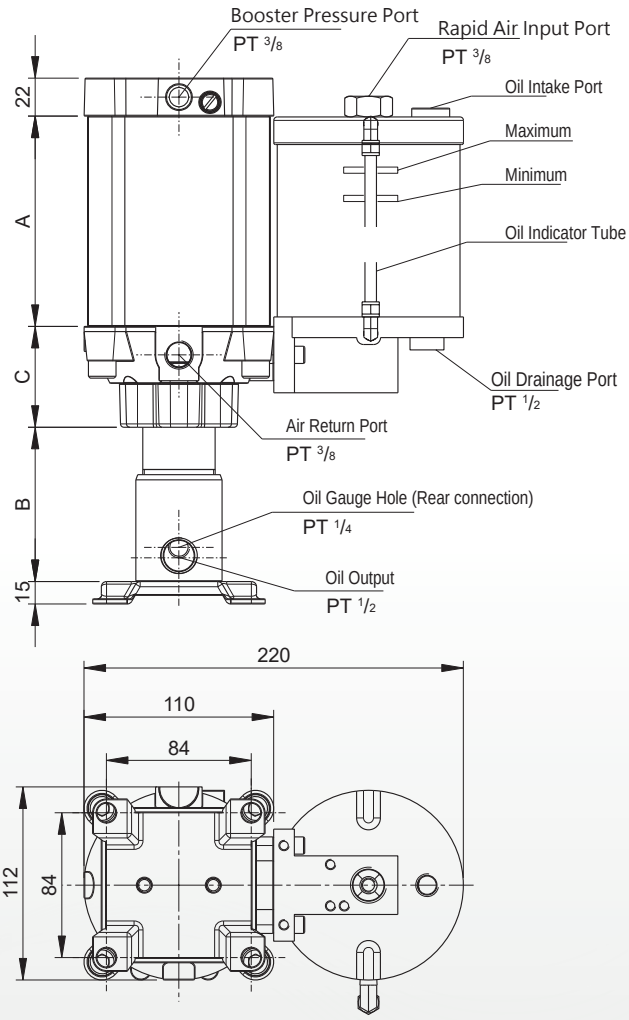

Unit : mm

Dimensions / Output Volume / Type	A			B			C	D
	50cc	70cc	120cc	50cc	70cc	120cc		
※ APF2-1006	85	101	141	85	85	140	58	3
※ APF2-1008	97	118	170	85	110	150	58	3
APF2-1011	126	154	225	93.5	123.5	188.5	58	3
APF2-1012	136	169	250	93.5	123.5	213.5	58	3
APF2-1016	157	198	300	123.5	153.5	263.5	58	3
APF2-1020	182	233	360	153.5	188.5	303.5	58	3
APF2-1025	214	278	437	188.5	263.5	-	58	3
APF2-1030	252	330	527	213.5	303.5	-	58	3
APF2-1039	308	405	658	263.5	-	-	58	3

※Indicates special instructions.

$$\text{L Oil Tank Length} = \frac{(\pi D^2/4 \times \text{Hydraulic cylinder stroke ST})}{(\text{Oil tank inside diameter}^2 \times \pi/4)} + \text{Basic Length } 165\text{mm}$$

APF2-PC Pre-pressurized Isolated Oil and Gas Pouch Model

Horizontal Type

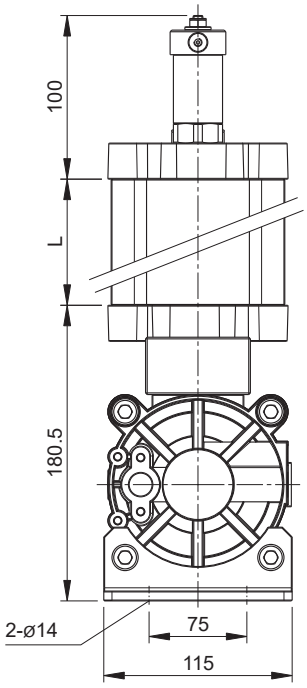

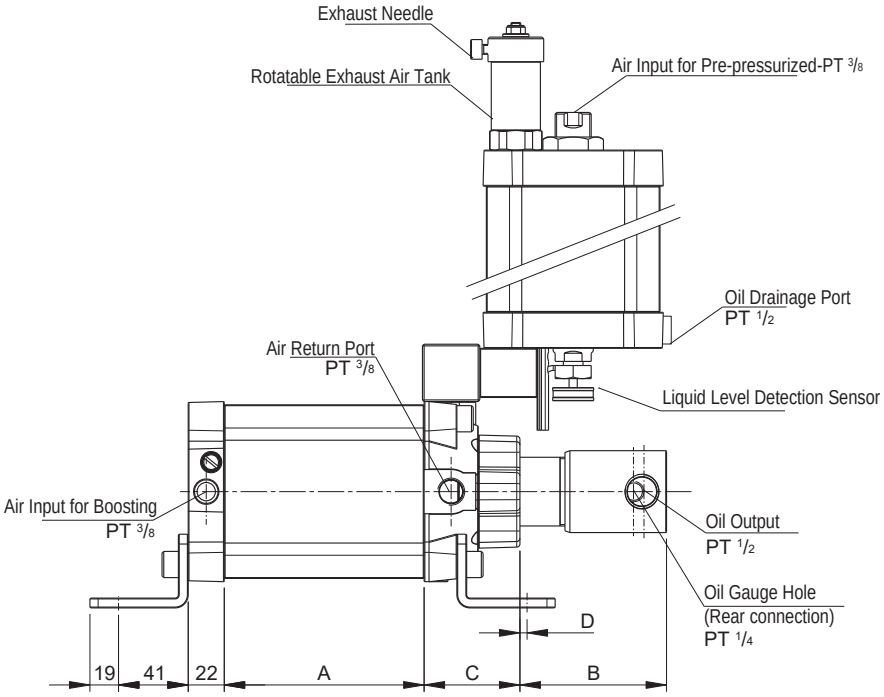

Vertical Type

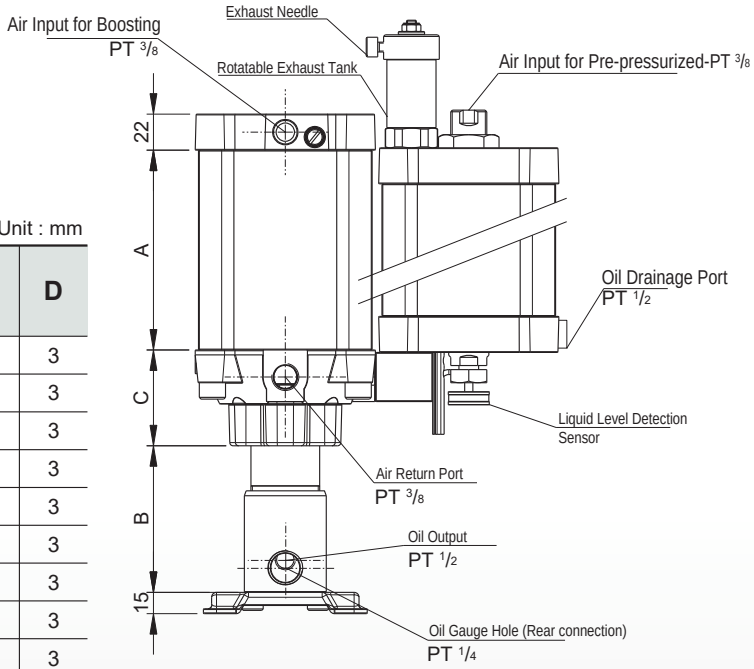

Unit : mm

Dimensions / Output Volume / Type	A			B			C	D
	50cc	70cc	120cc	50cc	70cc	120cc		
※ APF2-1006	85	101	141	85	85	140	58	3
※ APF2-1008	97	118	170	85	110	150	58	3
APF2-1011	126	154	225	93.5	123.5	188.5	58	3
APF2-1012	136	169	250	93.5	123.5	213.5	58	3
APF2-1016	157	198	300	123.5	153.5	263.5	58	3
APF2-1020	182	233	360	153.5	188.5	303.5	58	3
APF2-1025	214	278	437	188.5	263.5	-	58	3
APF2-1030	252	330	527	213.5	303.5	-	58	3
APF2-1039	308	405	658	263.5	-	-	58	3

※ Indicates special instructions.

L Length = Hydraulic cylinder capacity below 500cc is 245mm ; Capacity between 500~1000cc is 290mm

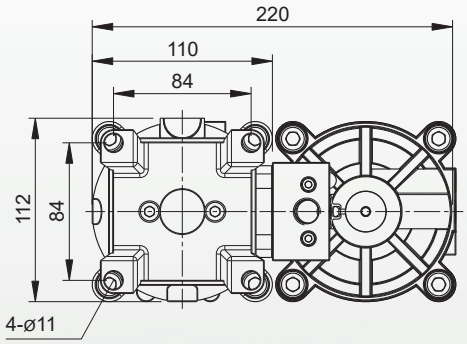

APF2-PB

APF2-PB Oil-Gas Isolation

Horizontal Type

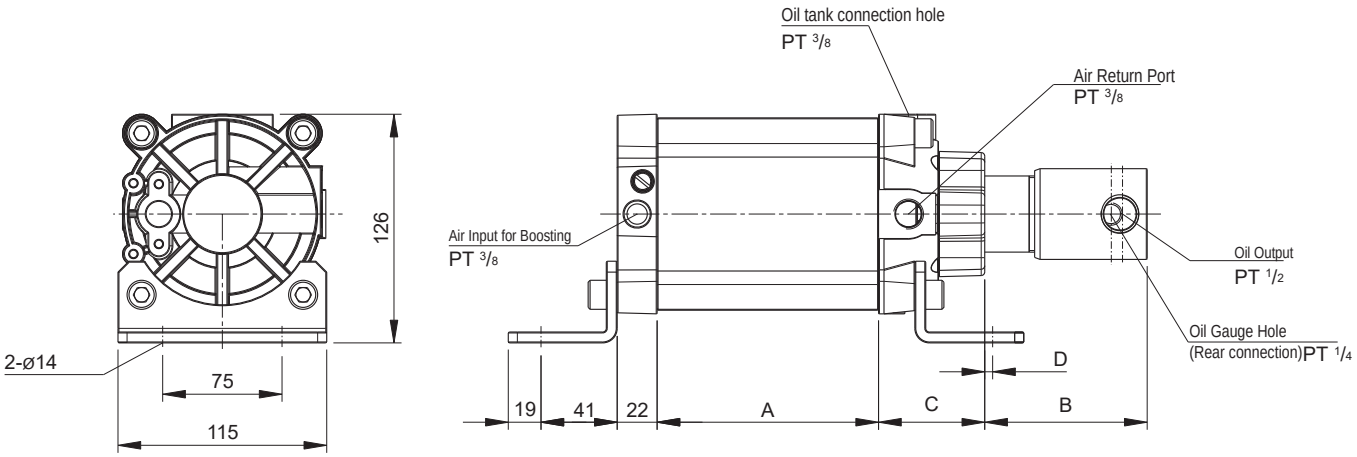

Vertical Type

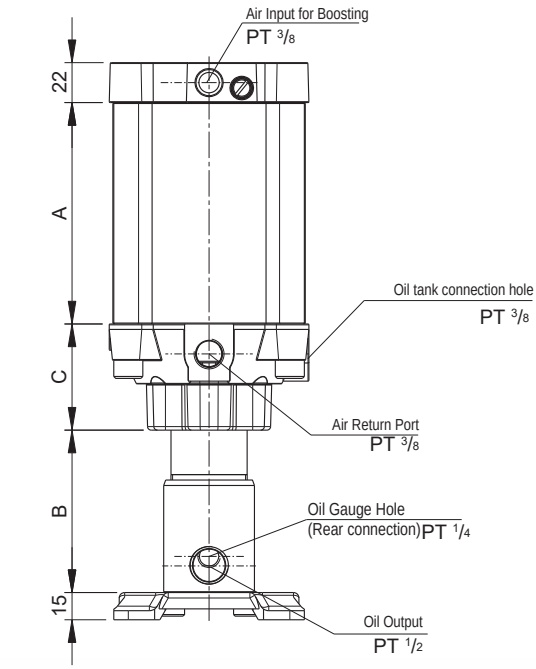

Unit : mm

Dimensions / Output Volume / Type	A			B			C	D
	50cc	70cc	120cc	50cc	70cc	120cc		
※ APF2-1006	85	101	141	85	85	140	58	3
※ APF2-1008	97	118	170	85	110	150	58	3
APF2-1011	126	154	225	93.5	123.5	188.5	58	3
APF2-1012	136	169	250	93.5	123.5	213.5	58	3
APF2-1016	157	198	300	123.5	153.5	263.5	58	3
APF2-1020	182	233	360	153.5	188.5	303.5	58	3
APF2-1025	214	278	437	188.5	263.5		58	3
APF2-1030	252	330	527	213.5	303.5		58	3
APF2-1039	308	405	658	263.5			58	3

※Indicates special instructions.

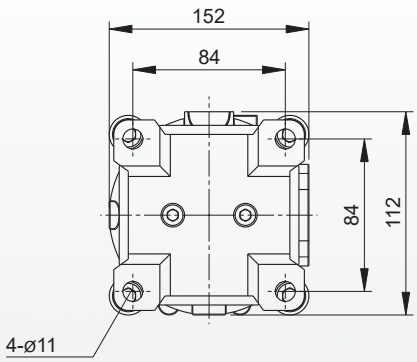

APF2-D Direct Pressure Model

Fill up to 80% of oil cup capacity recommended

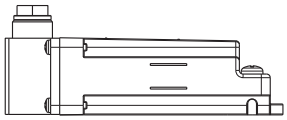

Horizontal Type

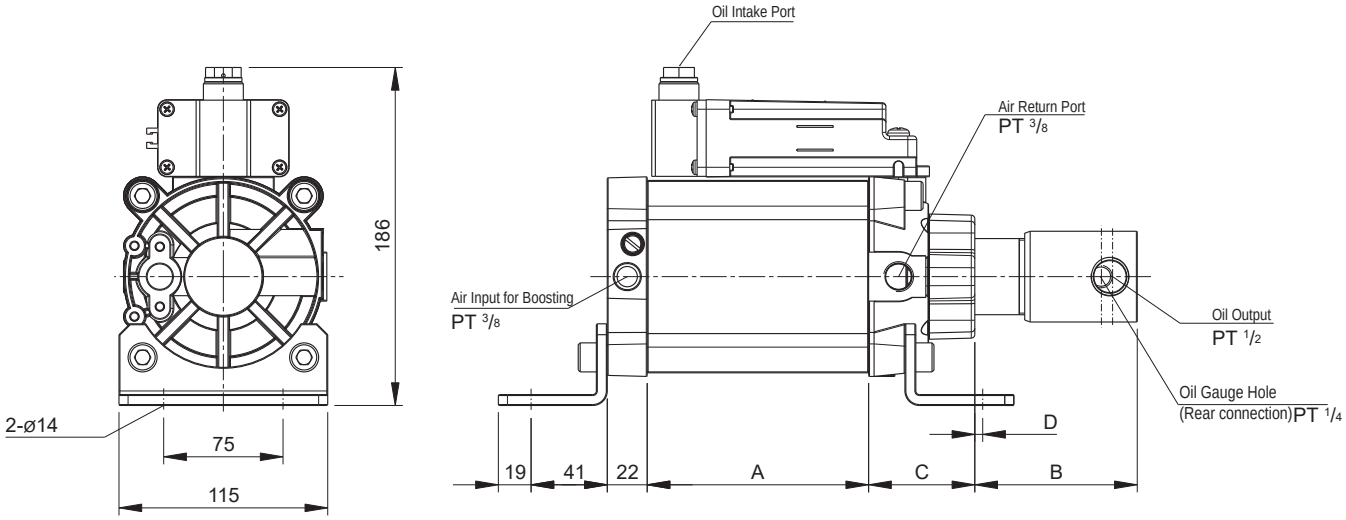

APT2
APT
APF2
APF
AHP
AHPT

Vertical Type

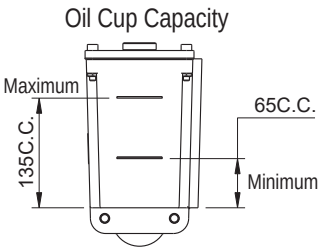

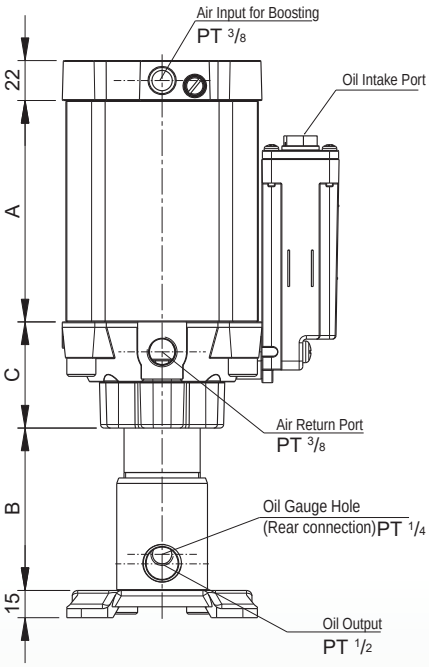

Unit : mm

Dimensions / Output Volume / Type	A			B			C	D
	50cc	70cc	120cc	50cc	70cc	120cc		
※ APF2-1006	85	101	141	85	85	140	58	3
※ APF2-1008	97	118	170	85	110	150	58	3
APF2-1011	126	154	225	93.5	123.5	188.5	58	3
APF2-1012	136	169	250	93.5	123.5	213.5	58	3
APF2-1016	157	198	300	123.5	153.5	263.5	58	3
APF2-1020	182	233	360	153.5	188.5	303.5	58	3
APF2-1025	214	278	437	188.5	263.5		58	3
APF2-1030	252	330	527	213.5	303.5		58	3
APF2-1039	308	405	658	263.5			58	3

※ Indicates special instructions.

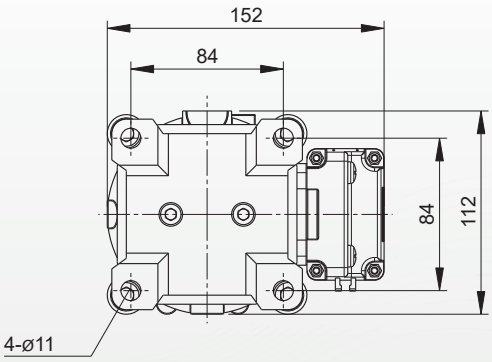

APF

APF-D Direct pressure Model

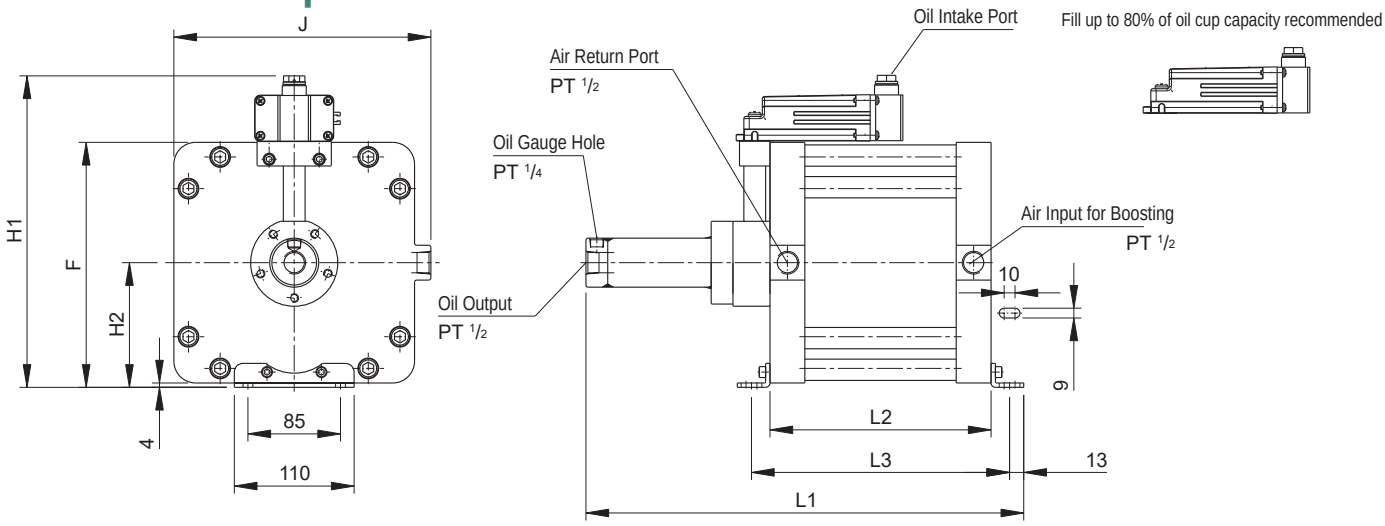

APF-P Pre-Pressurized Air Oil Contact Model

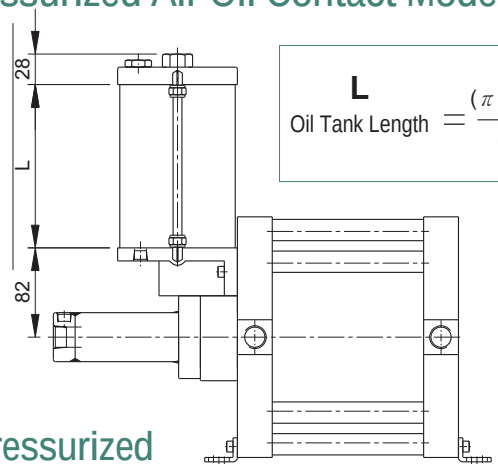

$$\text{L Oil Tank Length} = \frac{(\pi D^2/4 \times \text{Hydraulic cylinder stroke ST})}{(\text{Oil tank inside diameter}^2 \times \pi/4)} + \begin{array}{l}\text{P.PB Type (Basic length 150mm)}\\ \text{PA Type (Basic length 165mm)}\end{array}$$

APF-PC Pre-pressurized Isolated Oil and Gas Model

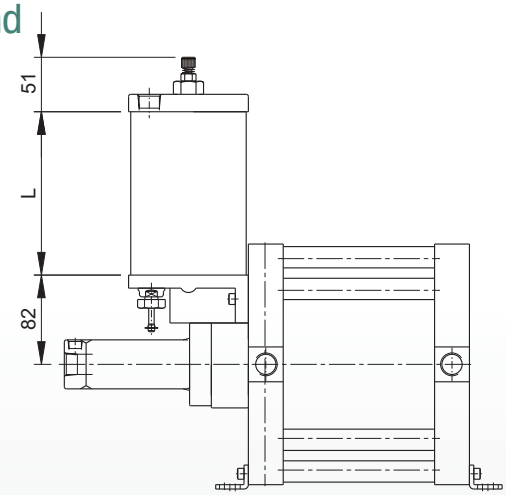

Unit : mm

Type \ Output Volume \ Dimensions		1628	1664	2044	20100
L1	70cc	388	638	402	652
	120cc	528	958	542	972
	200cc	758	1468	772	1482
L2	70cc	189	314	203	328
	120cc	259	474	273	488
	200cc	374	729	388	743
L3	70cc	223	348	237	362
	120cc	293	508	307	522
	200cc	408	763	422	777
H1		244	244	315	315
H2		94	94	114.5	114.5
F		184	184	255	255
J		195	195	235	235
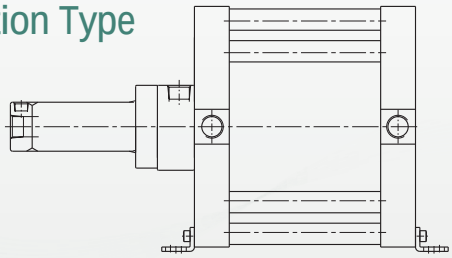
APF-PB Oil-Gas Isolation Type