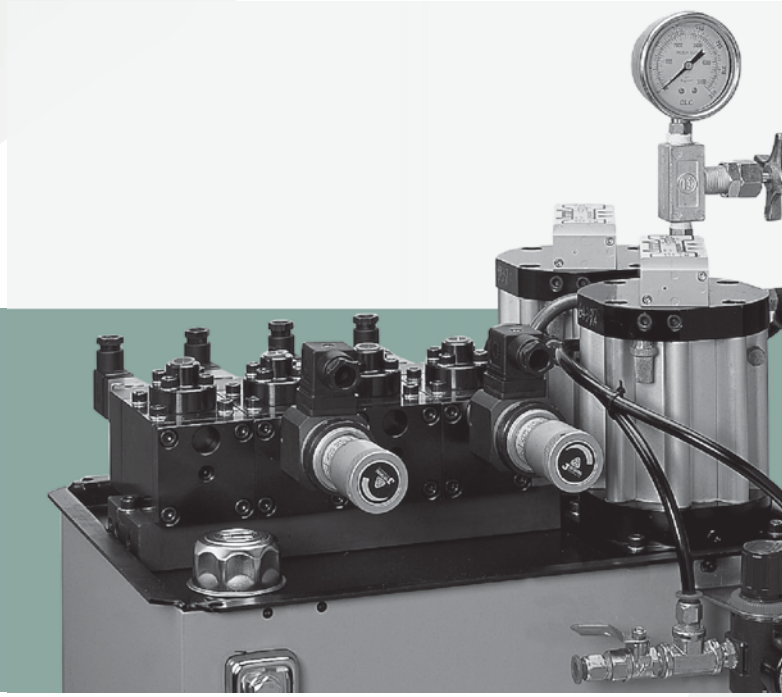

3 Boosting Devices

Pump Series

Patent No : M443803 / ZL201220497671.X

◎One Stage Hydraulic Air Pump / **AHP**

◎Two Stage Hydraulic Pump Component / **AHPT**

HINAKA

AHP/AHPT Ordering Guidelines

Ordering Guidelines

AHP 64 D10 V 4 D

1 Pneumatic Oil Pressure Pump Unit Type

AHP : Pneumatic oil pressure pump unit
AHPT : Two-stage pneumatic hydraulic pump unit

2 Ratio

Type / Specifications / Function	AHP Pneumatic Hydraulic Pump (Continuous Type)					
	0804	0810	0825	0844	0864	10100
Ratio	5:1	10:1	25:1	44:1	64:1	100:1
Output Volume	12	5	2.5	1.4	0.9	0.6
Hydraulic Pressure	25	50	125	220	320	500
Operating Oil	Viscosity grade CPC-R32 ISO VG32 or equivalent (Please inform is if using brake oil or other oil)					
Maximum Operating Pressure	0.2MPa~0.7MPa(2kgf/cm^2~7kgf/cm^2) Clean Compressed Air					
Working Temperature	-10℃~60℃					

3 Number of Pumps

S : Single Pump
D : Double pump (large flow with high and low pressure two-stage oil)

4 Oilway Control Mode

V: Solenoid valve / **B:** Manual valve / **A:** Air pressure valve

5 Number of 3/2 Zero Leakage Valves

1: 1 set of 3/2 zero leakage valves
2: 2 sets of 3/2 zero leakage valves
3: 3 sets of 3/3 zero leakage valves
4: 4 sets of 3/2 zero leakage valves

6 Solenoid Valve Voltage

D: DC24V / **01**: AC110V / **02**: AC220V / **03**: AC380V

Feature Description：

- When hydraulic pressure reaches set pressure, pneumatic actuation is used to stop. In the event of pressure drop, the pump automatically replenishes the pressure. This provides the safest and most stable choice for cutting and clamping.
- Ideal for high-pressure and long-term clamping applications, such as rapid mold changing systems, etc.
- Improves the drawback of motor hydraulic pumps generating high temperatures; oil temperature will not increase even with continuous 24-hour operation for months. Additionally, unlike conventional boosters, pneumatic pump provides continuous boost oil output.
- Pneumatically driven, able to start and stop instantly, offering advantages such as explosion-proof capability, energy-saving, and compact.
- The number of control valves can be selected as desired. Pneumatic pump can be equipped with dual high and low-pressure pumps, providing a large oil output and reducing clamping operation time.

AHP Circuit Diagram

Circuit Diagram：

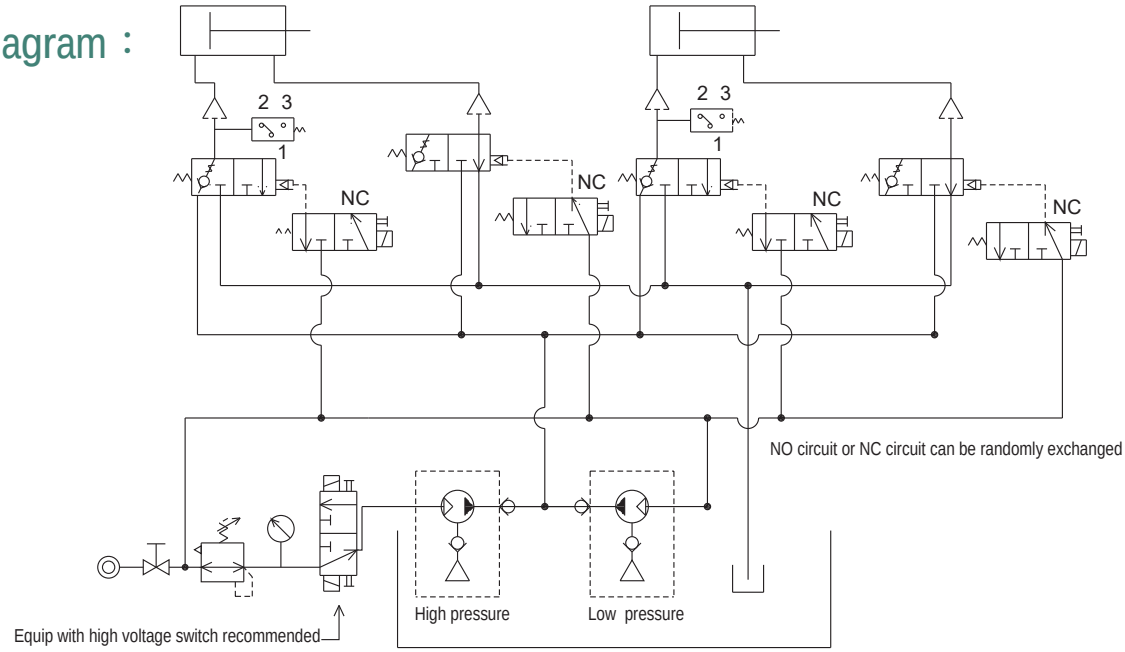

AHP Pneumatic Oil Pressure Pump Unit / Pneumatic Oil Pressure Pump Dimension Diagram：

Vertical Fuel Tank

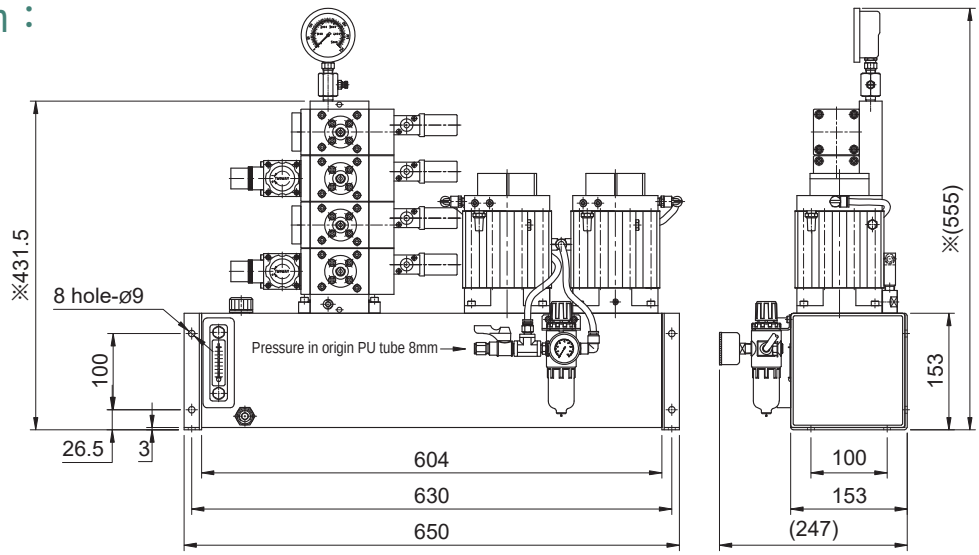

Horizontal Fuel Tank

※ Indicates each increase or decrease of one or three-port two-position valves, its size is increased or subtracted by 60mm.

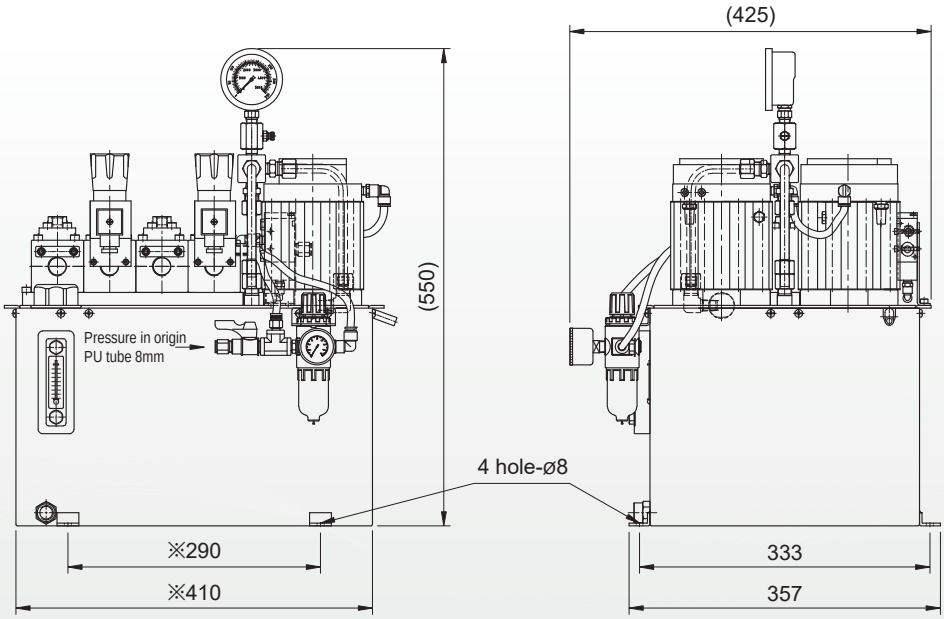

AHPT Circuit Diagram

Circuit Diagram：

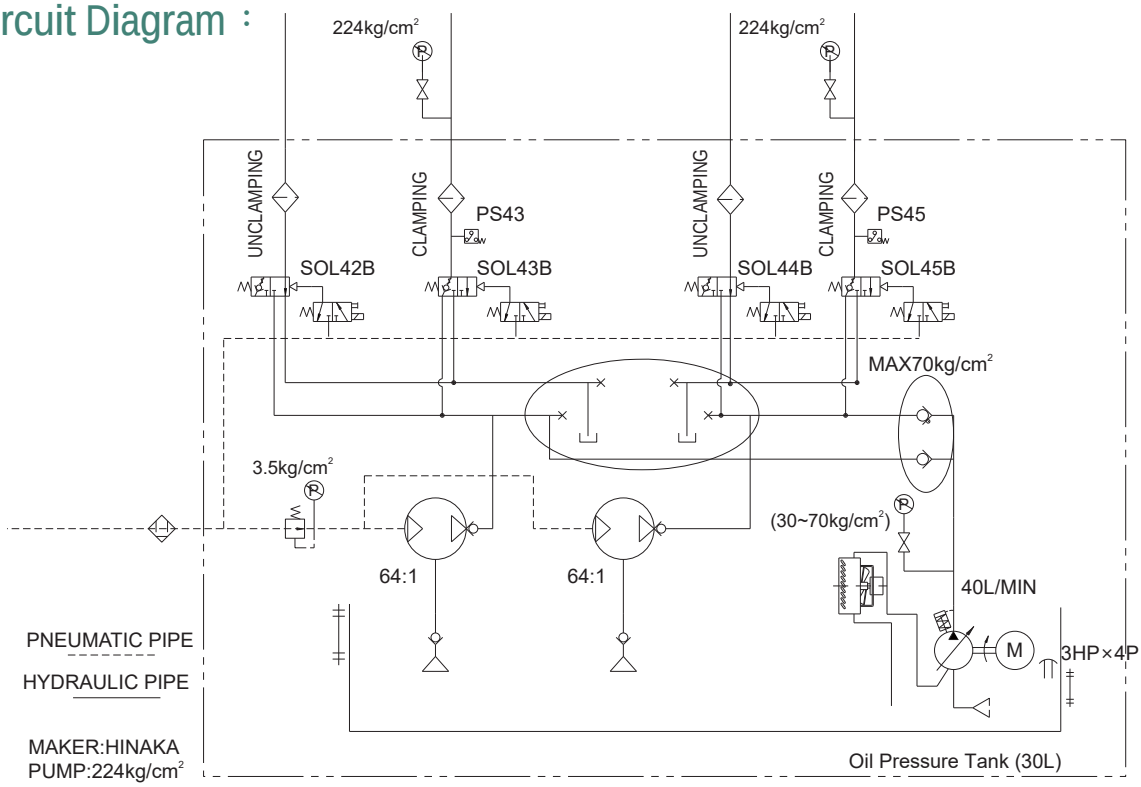

AHPT Two-Stage Pneumatic Hydraulic Pump Unit
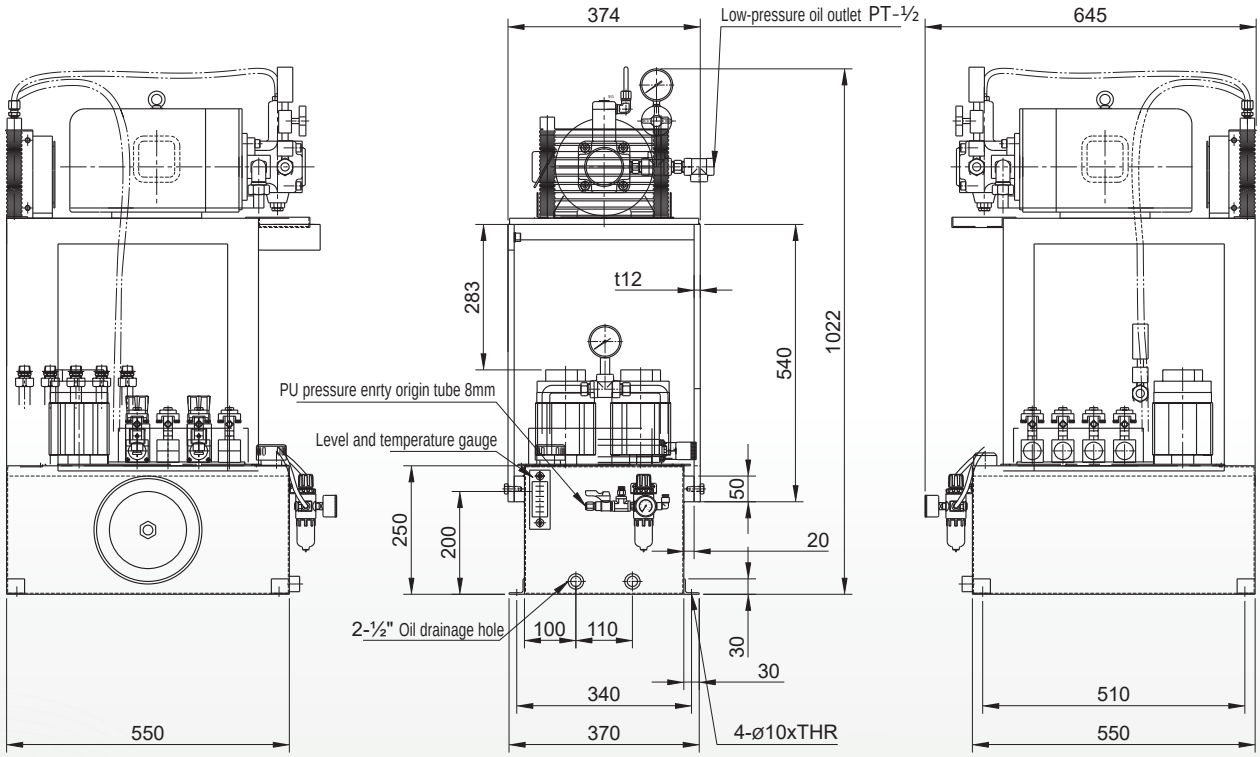
Dimensions Diagram：