1 Pneumatic drives

# ISO Standard

## ◎ISO 15552 / **DAI**

(Formerly ISO 6431)

HINAKA

# DAI Ordering Guidelines

## Ordering Guidelines

D A I D - 63 - M 50 - LB - Y

1. Model
2. Aluminium Alloy Series
3. ISO 15552 (Formerly ISO 6431)
4. Pneumatic Cylinder Type

| | |
|---|---|
| **DAI** Standard | **DAIF** Face To Face Multiple Position Cylinder |
| **DAID** Double Piston Rod | **DAIB** Tandem & Multiple Position Cylinder |
| **DAIE** Adjustable Double Piston Rod | **DAIT-R** Standard Tandem Cylinders |
| **DAIM** Back To Back Multiple Position Cylinder | **DAIT-H** Standard Tandem Cylinders |
| | **DAIC** Extended Cushions |

5. Bore Diameter
6. Sensor Device

   **M**: With Magnet / **N**: Without Magnet
7. Stroke (ST)
8. Mounting Accessories

| | |
|---|---|
| **FA** **FB** | **TC** |
| **LB** | **CA** **CB** |
| **TA** | |

9. Rod End Accessories

| | |
|---|---|
| **L** | **F** |
| **Y** | **P** |
| **T** | |

## Internal Structure：

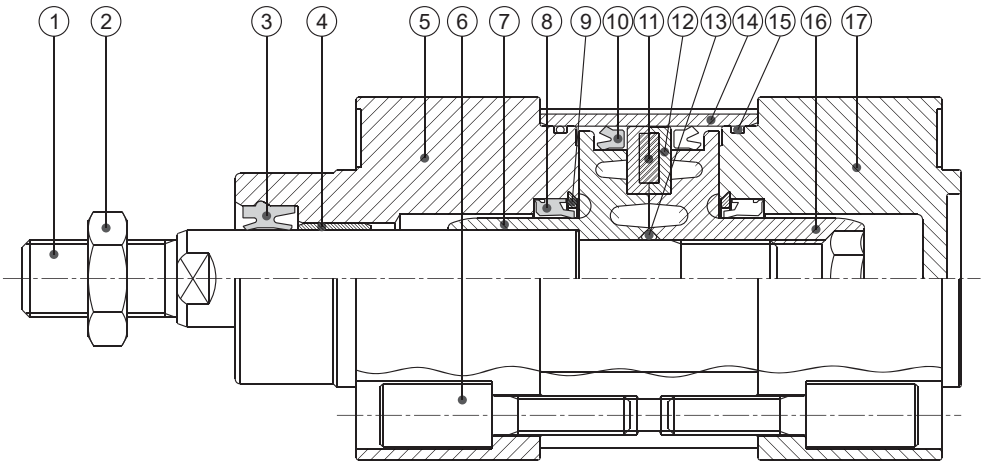


## Components：

| Item | Part Name | Material | Item | Part Name | Material |
|---|---|---|---|---|---|
| 1 | Piston Rod | S45C | 10 | U-Ring | NBR |
| 2 | Hex Nut | Iron | 11 | Magnetic Ring | Rubber |
| 3 | Rod Seal | NBR | 12 | Wearing Ring | POM |
| 4 | Self-oiling Bearing | Sintered Parts | 13 | O-Ring | NBR |
| 5 | Front Cap | A6061 | 14 | Extruded Tube | A6061 |
| 6 | Tie Rod Bolt | SS400 | 15 | O-Ring | NBR |
| 7 | Front Cap | Aluminum | 16 | Rear Piston | Aluminum |
| 8 | Cushion Ring | NBR | 17 | Rear Cap | A6061 |
| 9 | Cushion Ring Clasp | POM | | | |

## Applicable Conditions：

| Bore Size ø | Function | Working Fluid | Temperature Range | Operating Speed Range | Operating Oil | Maximum Operating Pressure |
|---|---|---|---|---|---|---|
| 32, 40, 50, 63<br>80, 100, 125 | Double Acting | Filtered Compressed Air | -10°C~60°C | 500mm/s | Not Necessary | 1MPa<br>(10kgf/cm²) |

# DAI

## Feature Description：

- DAI integrated aluminum alloy air cylinder. Designed according to specifications of ISO-15552, easily exchangeable.
- Fixed draw bar at front and back covers, tight integration of aluminum rod with rounded tubes, smooth acting.
- Extended length of joint buffer allows for excellent cushioning.
- Internal magnetic induction installation and hidden fixed external switch are easily adjusted. Streamlined contour.
- Cylinder diameter: ø32~ø125 with complete specifications.

## DAI (Standard Type)

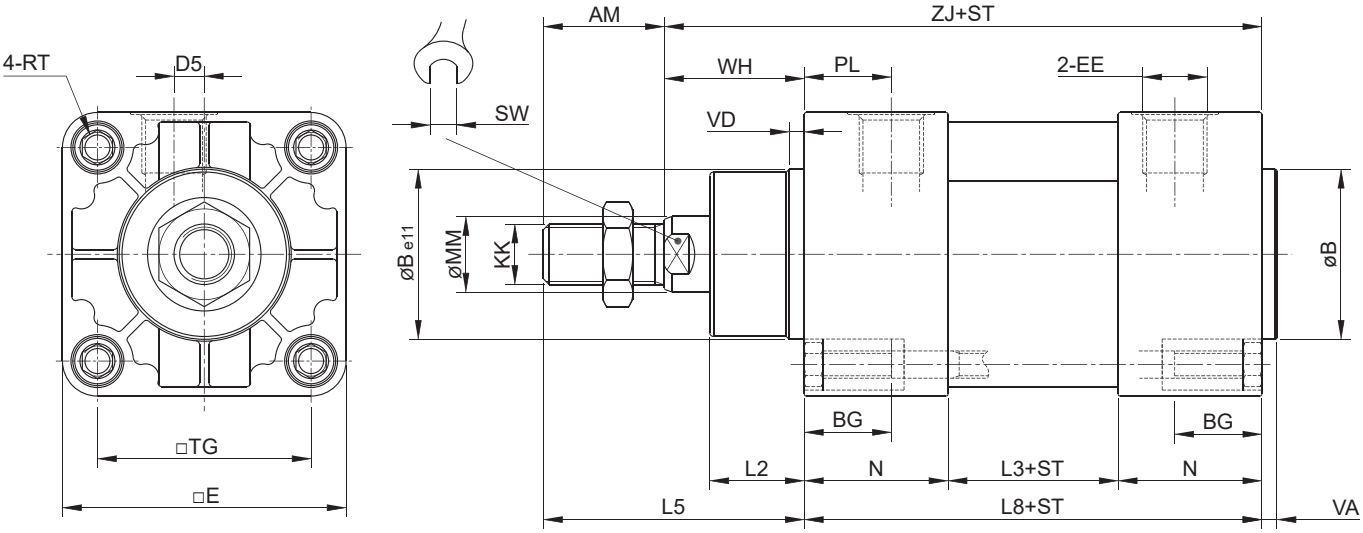


ST=Stroke Unit : mm

| Label / Bore Size | AM | øB | □E | □TG | D5 | RT | BG | VA | VD | PL | EE | KK | SW | ZJ | L8 | L2 | L3 | L5 | øMM | N | WH |
|---|---|---|---|---|---|---|---|---|---|---|---|---|---|---|---|---|---|---|---|---|---|
| ø32 | 22 | 30 | 47.5 | 32.5 | 5 | M6 | 19 | 4 | 4 | 14 | G1/8 | M10×1.25 | 10 | 120 | 94 | 16 | 40 | 48 | 12 | 27 | 26 |
| ø40 | 24 | 35 | 53.5 | 38 | 6 | M6 | 19 | 4 | 4 | 19 | G1/4 | M12×1.25 | 13 | 135 | 105 | 21 | 43 | 54 | 16 | 31 | 30 |
| ø50 | 32 | 40 | 65 | 46.5 | 7 | M8 | 21 | 4 | 4 | 19 | G1/4 | M16×1.5 | 17 | 143 | 106 | 25 | 43 | 69 | 20 | 31.5 | 37 |
| ø63 | 32 | 45 | 75 | 56.5 | 8 | M8 | 21 | 4 | 4 | 23 | G3/8 | M16×1.5 | 17 | 158 | 121 | 25 | 45 | 69 | 20 | 38 | 37 |
| ø80 | 40 | 45 | 94 | 72 | 10 | M10 | 22 | 4 | 4 | 25 | G3/8 | M20×1.5 | 22 | 174 | 128 | 33 | 54 | 86 | 25 | 37 | 46 |
| ø100 | 40 | 55 | 113 | 89 | 10 | M10 | 22 | 4 | 4 | 26 | G1/2 | M20×1.5 | 22 | 189 | 138 | 33 | 58 | 91 | 25 | 40 | 51 |
| ø125 | 54 | - | 146 | 110 | - | M12 | 25 | - | - | 26 | G1/2 | M27×2.0 | 32 | 199 | 134 | 32 | 52 | 119 | 35 | 41 | 65 |

## Feature Description：

- 〈ø40~ø100〉 piston and piston rod are one fixed body, high concentricity, and low friction.
- Magnetic ring and adjustable cushioning at both ends.
- Cylinder stroke can be variably adjusted on the outlet side, with accurate stroke positioning.
- Company designed scaled precision adjustment cap, with an accuracy of 0.01mm.

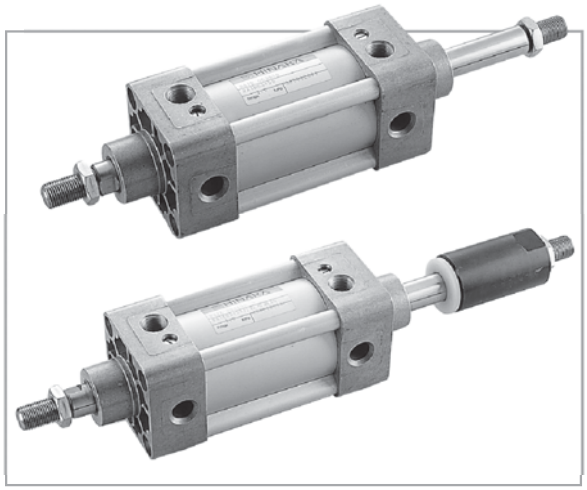



## DAID (Double End Rod Double Acting)

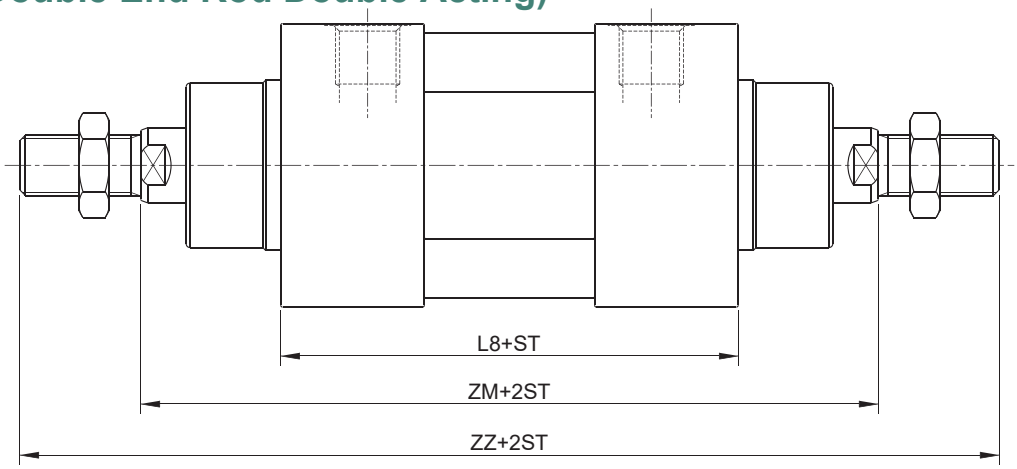


## DAIE(Double End Rod Adjustable Stroke)

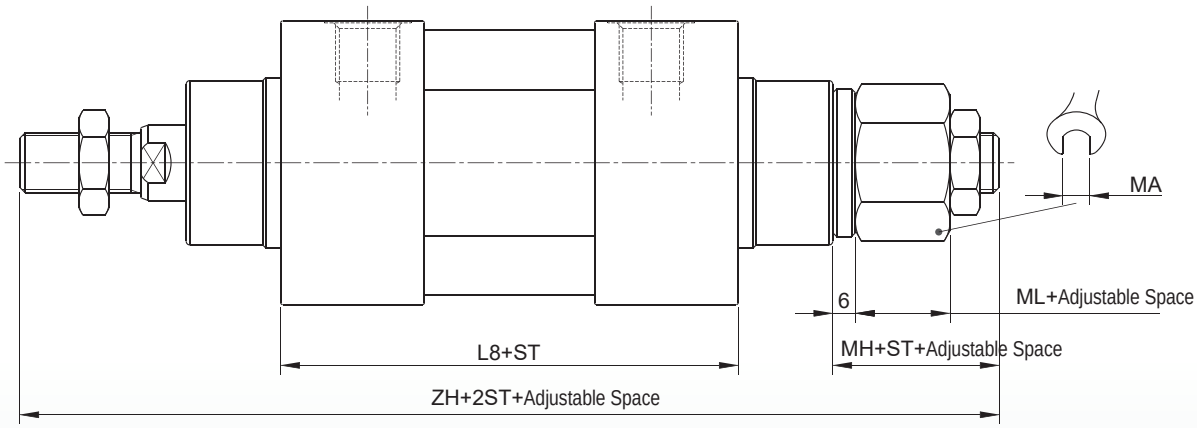


ST=Stroke Unit : mm

| Label / Bore Size | MA | MH | ML | ZH | ZM | ZZ | Adjustable Space |
|---|---|---|---|---|---|---|---|
| ø32 | 22 | 32 | 16 | 190 | 146 | 190 | 25/50 |
| ø40 | 27 | 33 | 20 | 213 | 165 | 213 | |
| ø50 | 36 | 44 | 25 | 244 | 180 | 244 | |
| ø63 | 36 | 44 | 25 | 259 | 195 | 259 | |
| ø80 | 41 | 53 | 28 | 300 | 220 | 300 | |
| ø100 | 41 | 58 | 28 | 320 | 240 | 320 | |
| ø125 | 46 | 87 | 47 | 372 | 264 | 372 | |

※ Refer to Standard Type for other dimensions.

# DAIM/F

## Feature Description：

**Model : DAIM**
Back-to-Back Standard Type

**Model : DAIF**
Front-to-Front Standard Type

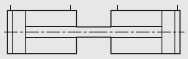

**Model : DAIM..M**
Back-to-Back Magnetic Type

**Model : DAIF..M**
Front-to-Front Magnetic Type

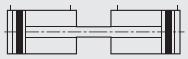

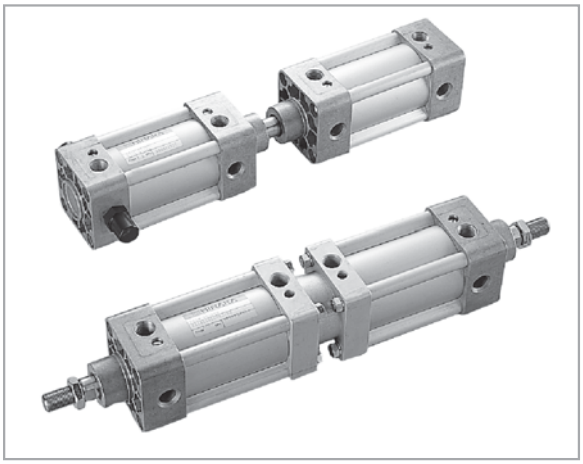

Functions：

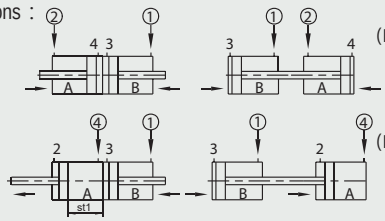


(I) As shown in figure air supplied to [1] [2] - Both cylinders A and B retract to shortest stroke

(II) As shown in figure air supplied to [1] [4] - Cylinder A extends, cylinder B retracts to first stroke

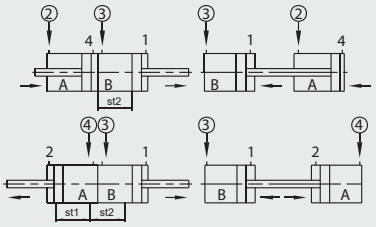


(I) As shown in figure air supplied to [2] [3] - Cylinder A retracts, cylinder B extends to second stroke

(II) As shown in figure air supplied to [4] [3] - Both cylinders A and B extend outward to longest stroke

## DAIM (Back-to-Back Type)

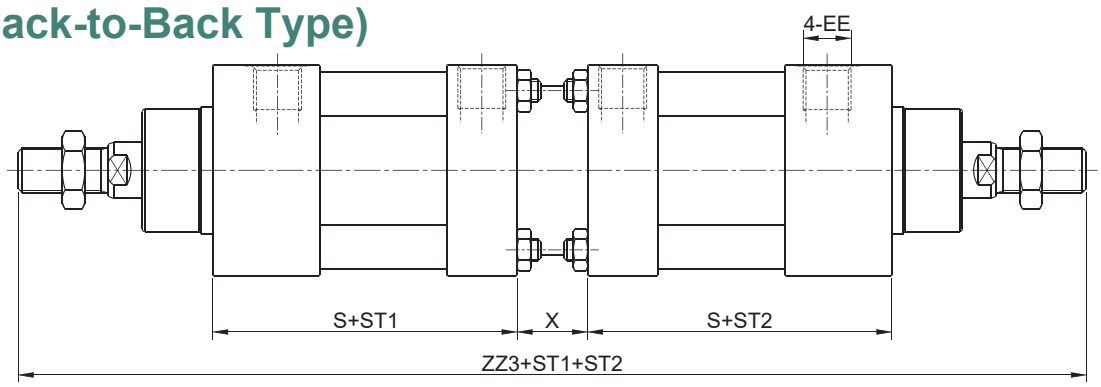


## DAIF (Front-to-Front Type)

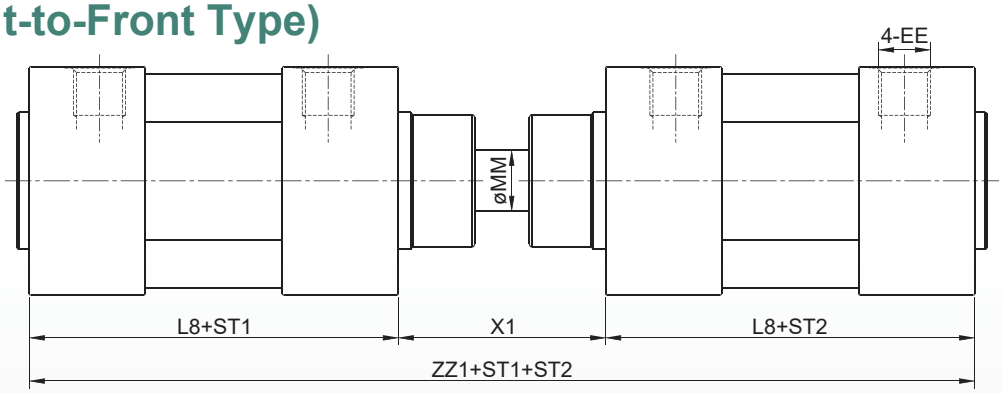


ST=Stroke Unit : mm

| Label / Bore Size | S | X | X1 | ZZ1 | ZZ3 |
|---|---|---|---|---|---|
| ø32 | 83 | 23 | 55 | 243 | 285 |
| ø40 | 94 | 23 | 55 | 265 | 319 |
| ø50 | 94.5 | 25 | 68 | 280 | 352 |
| ø63 | 108 | 25 | 68 | 310 | 379 |
| ø80 | 116 | 30 | 92 | 348 | 434 |
| ø100 | 123 | 30 | 92 | 368 | 458 |
| ø125 | - | - | 105 | 373 | - |

※ Refer to Standard Type for other dimensions.
※ Design for ø125 DIDM (Back-to-Back) unavailable

## Feature Description：

**Model: DAIB**

Tandem Tri-Position

**Model: DAIT..R**

Forward/Backward
Tandem Amplified Force

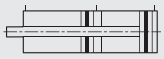

**Model: DAIT..H**

Forward Tandem Amplified Force

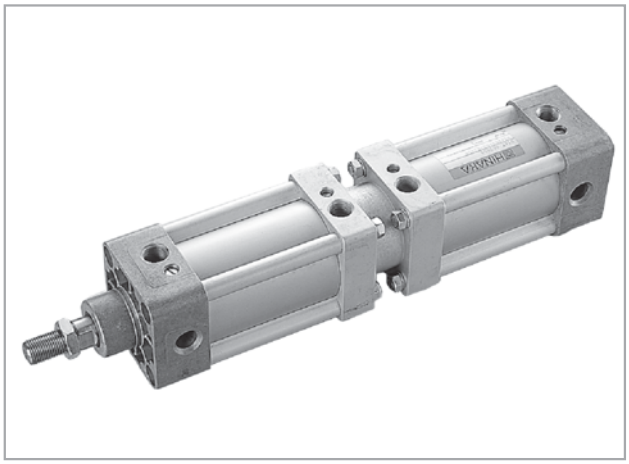



Functions：

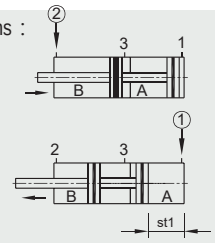


(I) As shown in the figure air supplied to [2] - Both Cylinders A and B retract to shortest stroke

(II) As shown in the figure air supplied to [1] - Cylinder A extends to first stroke

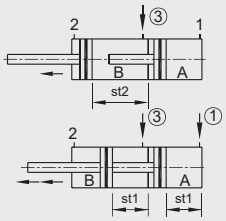


(III) As shown in the figure air supplied to [3] - Cylinder B extend to second stroke

(IV) As shown in the figure simultaneous air supplied to[3] [1] - Both A and B extend; in the first stroke the shaft output is double the stroke

※ Stroke of cylinder B must be greater than stroke of cylinder A (B > Stroke A)

## DAIB (Tandem Tri-Position)

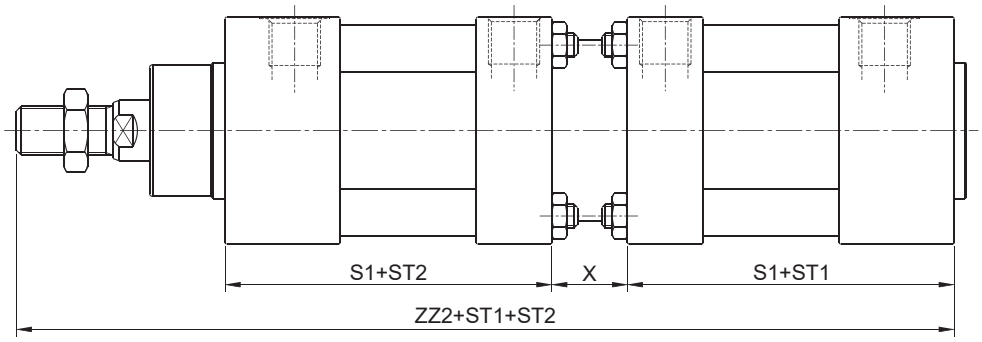


## DAIT-R/H (Tandem Amplified Force)

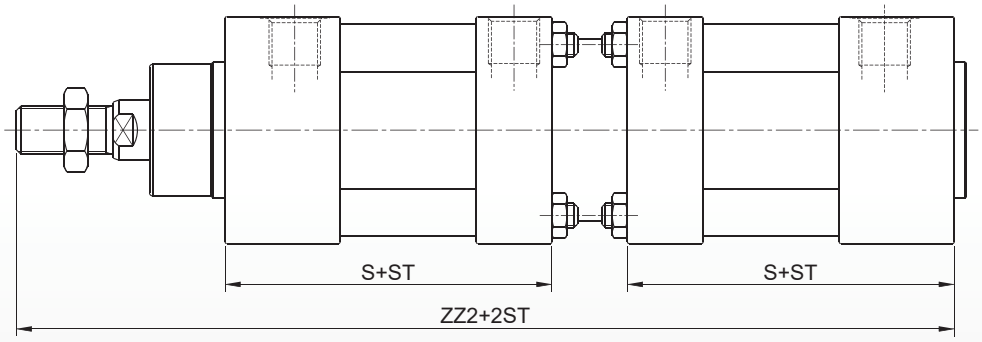


ST= Stroke Unit : mm

| Label / Bore Size | ZZ2 | S1 |
|---|---|---|
| ø32 | 237 | 83 |
| ø40 | 269 | 94 |
| ø50 | 283 | 94.5 |
| ø63 | 310 | 108 |
| ø80 | 348 | 116 |
| ø100 | 367 | 123 |
| ø125 | 400 | 123 |

※ Refer to Standard Type for other dimensions.

# DAIC

## Feature Description：

■ Cushion length between both ends extends to 60mm. Replaces external hydraulic buffer under high-speed motion.

Model : DAIC

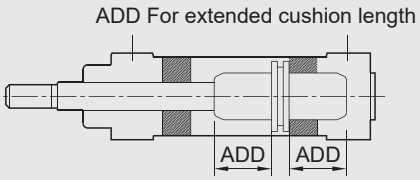


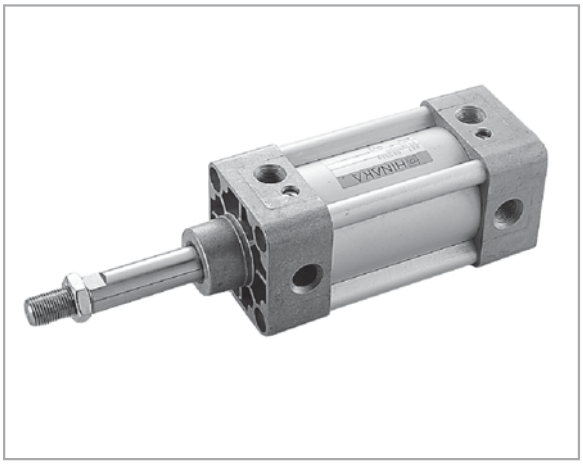

## DAIC (Extended Cushion Type)

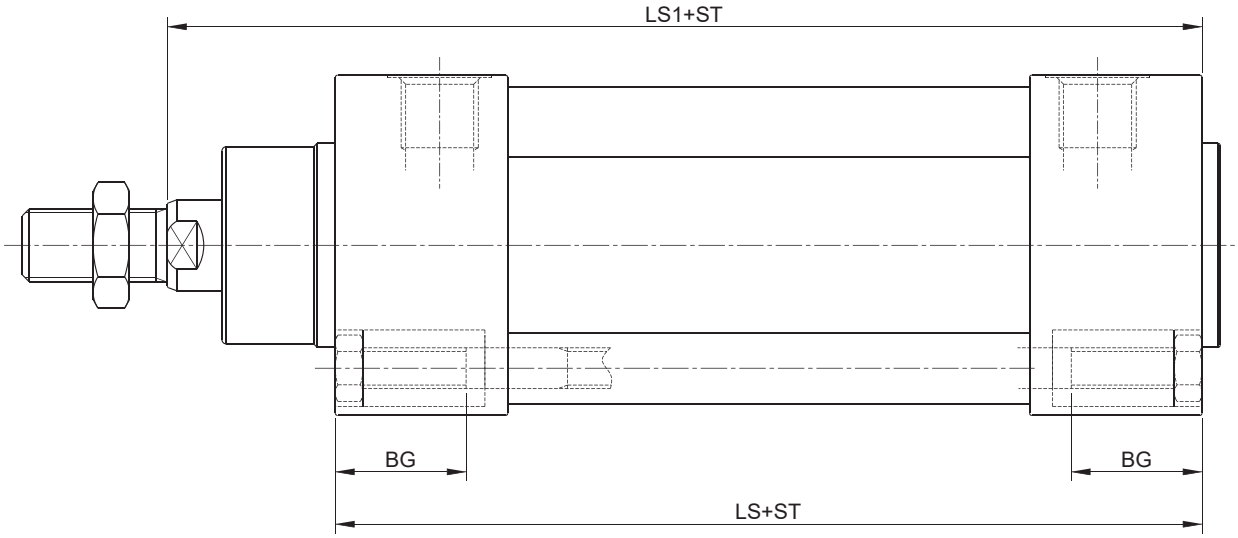


ST= Stroke Unit : mm

| Label / Bore Size | BG | LS | LS1 |
|---|---|---|---|
| ø32 | 19 | 170 | 196 |
| ø40 | 19 | 177 | 207 |
| ø50 | 19 | 176 | 213 |
| ø63 | 19 | 191 | 228 |
| ø80 | 20 | 194 | 240 |
| ø100 | 20 | 204 | 255 |

※ Refer to Standard Type for other dimensions.

## FA-FB Type - Front Flange/Rear Flange

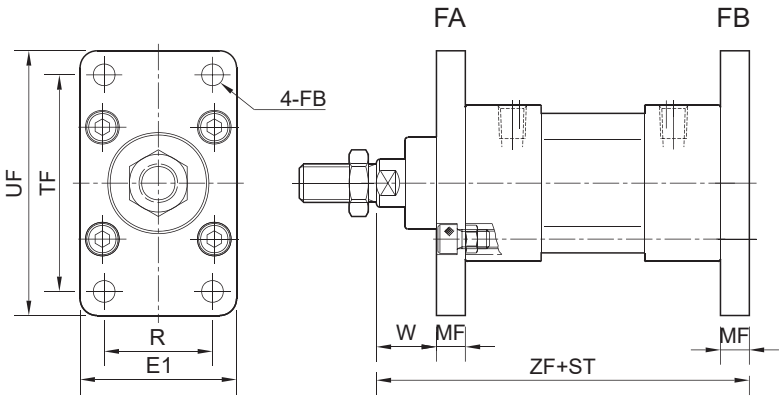


Unit : mm

| Label / Bore Size | E1 | øFB H13 | MF | R JS14 | TF JS14 | UF | W | ZF |
|---|---|---|---|---|---|---|---|---|
| ø32 | 50 | 7 | 10 | 32 | 64 | 80 | 16 | 130 |
| ø40 | 55 | 9 | 10 | 36 | 72 | 90 | 20 | 145 |
| ø50 | 65 | 9 | 12 | 45 | 90 | 110 | 25 | 155 |
| ø63 | 75 | 9 | 12 | 50 | 100 | 120 | 25 | 170 |
| ø80 | 95 | 12 | 16 | 63 | 126 | 153 | 30 | 190 |
| ø100 | 115 | 14 | 16 | 75 | 150 | 178 | 35 | 205 |
| ø125 | 150 | 16 | 20 | 90 | 180 | 220 | 45 | 219 |

## TA Type - Front Trunnion

Front cover swing hinge saves time on mechanical design

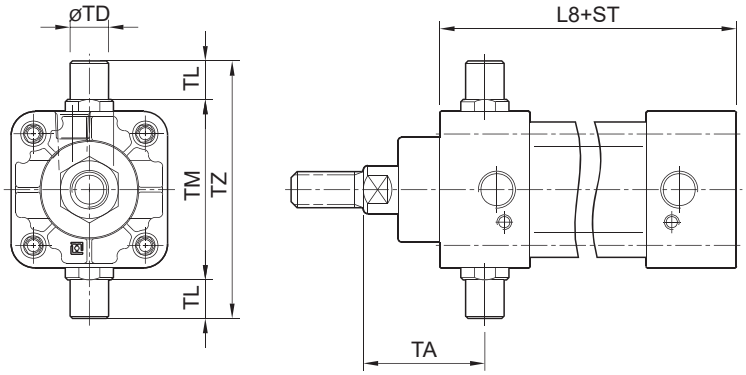


Unit : mm

| Label / Bore Size | TA | øTD e9 | TM h14 | TZ h14 | L8 | TL |
|---|---|---|---|---|---|---|
| ø32 | 43 | 12 | 50 | 74 | 94 | 12 |
| ø40 | 49 | 16 | 62 | 95 | 105 | 16 |
| ø50 | 53 | 16 | 75 | 107 | 106 | 16 |
| ø63 | 60 | 20 | 90 | 130 | 121 | 20 |
| ø80 | 68 | 20 | 110 | 150 | 128 | 20 |
| ø100 | 76 | 25 | 132 | 182 | 138 | 25 |

## TC Type - Center Trunnion

ø32~ø100 ø125

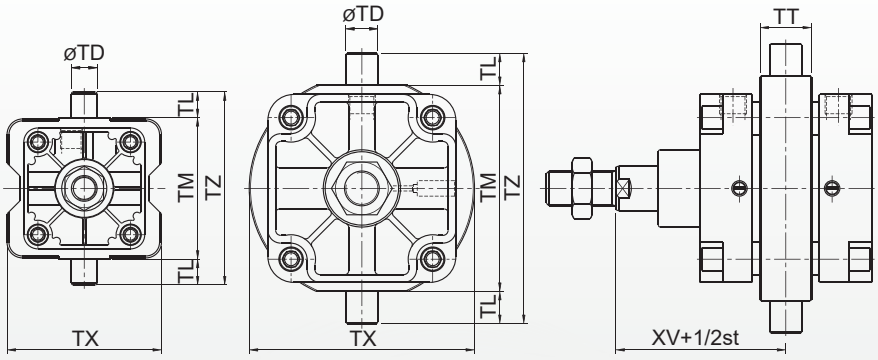


Unit : mm

| Label / Bore Size | XV | øTD e9 | TM h14 | TT 0.2 | TZ h14 | TL |
|---|---|---|---|---|---|---|
| ø32 | 73 | 12 | 50 | 22 | 74 | 12 |
| ø40 | 82.5 | 16 | 63 | 28 | 95 | 16 |
| ø50 | 90 | 16 | 75 | 32 | 107 | 16 |
| ø63 | 97.5 | 20 | 90 | 35 | 130 | 20 |
| ø80 | 110 | 20 | 110 | 40 | 150 | 20 |
| ø100 | 120 | 25 | 132 | 45 | 182 | 25 |
| ø125 | 132 | 25 | 160 | 40 | 210 | 25 |

## CA Type - Single Clevis Bracket

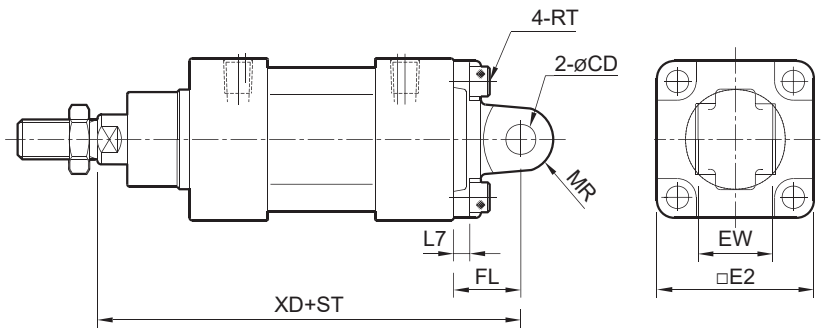


Unit : mm

| Label / Bore Size | øCD H9 | □E2 | RT | EW -0.2 -0.6 | FL ±0.2 | L7 | MR max | XD ±1.25 | Weight |
|---|---|---|---|---|---|---|---|---|---|
| ø32 | 10 | 45 | M6 | 26 | 22 | 5.5 | 11 | 142 | 0.21 |
| ø40 | 12 | 53.5 | M6 | 28 | 25 | 5.5 | 13 | 160 | 0.31 |
| ø50 | 12 | 63 | M8 | 32 | 27 | 6.5 | 13 | 170 | 0.45 |
| ø63 | 16 | 73 | M8 | 40 | 32 | 6.5 | 17 | 190 | 0.72 |
| ø80 | 16 | 94 | M10 | 50 | 36 | 10 | 17 | 210 | 1.33 |
| ø100 | 20 | 113 | M10 | 60 | 41 | 10 | 21 | 230 | 2.04 |
| ø125 | 25 | 140 | M12 | 70 | 50 | 10 | 25 | 249 | - |

## CB Type- Double Clevis Bracket

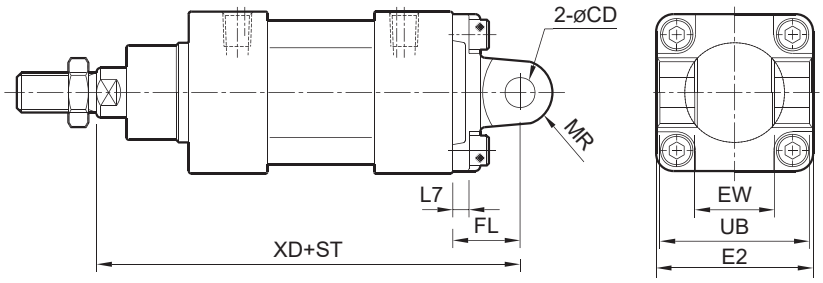


Unit : mm

| Label / Bore Size | EW H14 | øCD H9 | E2 | FL ±0.2 | L7 | MR max | UB | XD ±1.25 | Weight |
|---|---|---|---|---|---|---|---|---|---|
| ø32 | 26 | 10 | 48 | 22 | 5.5 | 11 | 45 | 142 | 0.18 |
| ø40 | 28 | 12 | 53 | 25 | 5.5 | 13 | 52 | 160 | 0.21 |
| ø50 | 32 | 12 | 63 | 27 | 6.5 | 13 | 60 | 170 | 0.41 |
| ø63 | 40 | 16 | 73 | 32 | 6.5 | 17 | 73 | 190 | 0.58 |
| ø80 | 50 | 16 | 98 | 36 | 10 | 17 | 90 | 210 | 1.11 |
| ø100 | 60 | 20 | 113 | 41 | 10 | 21 | 110 | 230 | 1.76 |
| ø125 | 70 | 25 | 140 | 50 | 10 | 25 | 130 | 249 | - |

## LB Type - Foot Bracket

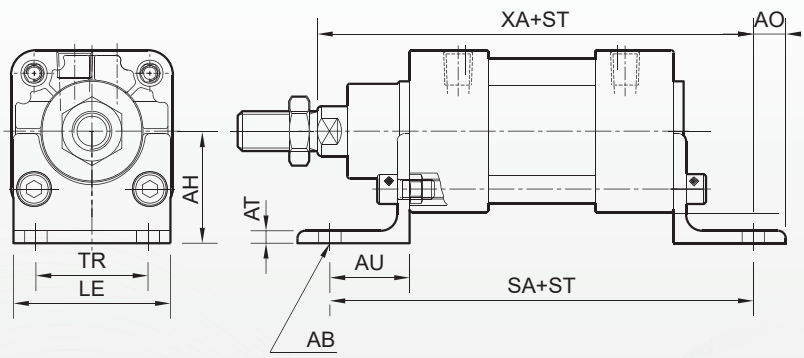


Unit : mm

| Label / Bore Size | øAB | AH ±0.5 | AO | AT | AU | LE | SA | TR ±0.2 | XA | Weight |
|---|---|---|---|---|---|---|---|---|---|---|
| ø32 | 7 | 32 | 11 | 5 | 24 | 48 | 142 | 32 | 144 | 0.16 |
| ø40 | 9 | 36 | 12 | 5 | 28 | 53 | 161 | 36 | 163 | 0.20 |
| ø50 | 9 | 45 | 13 | 5 | 32 | 63 | 170 | 45 | 175 | 0.32 |
| ø63 | 9 | 50 | 13 | 5 | 32 | 73 | 185 | 50 | 190 | 0.38 |
| ø80 | 12 | 63 | 19 | 6 | 41 | 94 | 210 | 63 | 215 | 0.82 |
| ø100 | 14.5 | 71 | 19 | 6 | 41 | 115 | 220 | 75 | 230 | 0.99 |
| ø125 | 16.5 | 90 | 25 | 8 | 45 | 140 | 224 | 90 | 244 | - |

## Y Joint

ø32, ø40

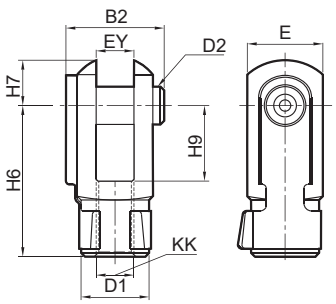


ø50~ø125

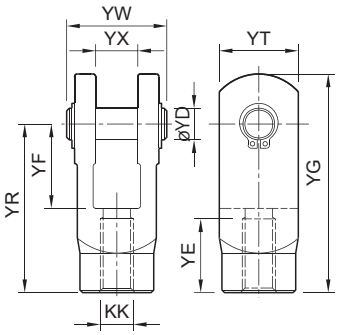


Unit : mm

| Label / Bore Size | øYD | YE | YF | YG | YR | YT | YW | YX | KK | Weight |
|---|---|---|---|---|---|---|---|---|---|---|
| ø32 | 10 | 20 | 20 | 52 | 40 | 20 | 26 | 10 | M10×1.25 | 0.08 |
| ø40 | 12 | 24 | 24 | 62 | 48 | 24 | 32 | 12 | M12×1.25 | 0.12 |
| ø50 | 16 | 32 | 32 | 83 | 64 | 32 | 40 | 16 | M16×1.5 | 0.32 |
| ø63 | 16 | 32 | 32 | 83 | 64 | 32 | 40 | 16 | M16×1.5 | 0.32 |
| ø80 | 20 | 33 | 40 | 105 | 80 | 40 | 48 | 20 | M20×1.5 | 0.65 |
| ø100 | 20 | 33 | 40 | 105 | 80 | 40 | 48 | 20 | M20×1.5 | 0.65 |
| ø125 | 30 | 52 | 55 | 150 | 110 | 55 | 66 | 30 | M27×2.0 | - |

## T Type - Floating Joint

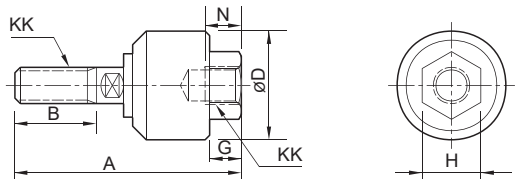


Unit : mm

| Bore Size | Label / Model | KK | A | B | N | øD | G | H | Weight |
|---|---|---|---|---|---|---|---|---|---|
| ø32 | KG-1010T | M10×1.25 | 58 | 20 | 9 | 26 | 8 | 17 | 0.11 |
| ø40 | KG-1012T | M12×1.25 | 58 | 21.5 | 9 | 28 | 8 | 17 | 0.25 |
| ø50,63 | KG-1016T | M16×1.5 | 90 | 27 | 14 | 45 | 12 | 27 | 0.39 |
| ø80,100 | KG-1020T | M20×1.5 | 102 | 29 | 18 | 53 | 14 | 33 | 0.78 |
| ø125 | KG-1027T | M27×2.0 | 124 | 35 | 24 | 61 | 22 | 41 | 1.32 |

## L Type - Floating Joint Connector Base

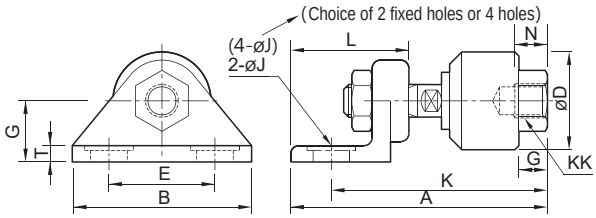


Unit : mm

| Bore Size | Label / Model | KK | A | B | C | øD | E | K | L | T | øJ | G | N | Weight |
|---|---|---|---|---|---|---|---|---|---|---|---|---|---|---|
| ø32 | KG-1010L | M10×1.25 | 74 | 44 | 19 | 26 | 26 | 63 | 35 | 5 | 9 | 8 | 9 | 0.98 |
| ø40 | KG-1012L | M12×1.25 | 71 | 45 | 19 | 28 | 26 | 60 | 36 | 6 | 9 | 8 | 9 | 1.0 |
| ø50,63 | KG-1016L | M16×1.5 | 151 | 60 | 28 | 45 | 32 | 105 | 90 | 16 | 11 | 12 | 14 | 1.5 |
| ø80,100 | KG-1020L | M20×1.5 | 178 | 68 | 35 | 53 | 36 | 124 | 106 | 36 | 14 | 14 | 18 | 2.0 |
| ø125 | KG-1027L | M27×2.0 | 201 | 68 | 42 | 60 | 36 | 148 | 112 | 36 | 14 | 22 | 24 | 2.2 |

For other dimensions refer to T Type

## F Type - Front Flange with Floating Joint

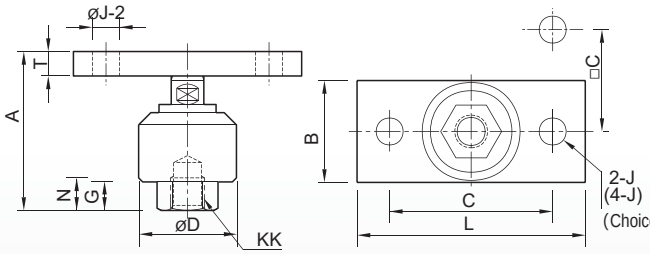


Unit : mm

| Bore Size | Label / Model | KK | A | B | C | øD | G | H | øJ | L | N | T | Weight |
|---|---|---|---|---|---|---|---|---|---|---|---|---|---|
| ø32 | KG-1010F | M10×1.25 | 48 | 32 | 44 | 26 | 8 | 17 | 6.6 | 56 | 9 | 9 | 1.0 |
| ø40 | KG-1012F | M12×1.25 | 45 | 32 | 44 | 28 | 8 | 17 | 6.6 | 65 | 9 | 9 | 1.15 |
| ø50,63 | KG-1016F | M16×1.5 | 81 | 74 | 45 | 45 | 12 | 27 | 11 | - | 14 | 16 | 1.65 |
| ø80,100 | KG-1020F | M20×1.5 | 92 | 100 | 62 | 53 | 14 | 33 | 14 | - | 18 | 18 | 2.15 |
| ø125 | KG-1027F | M27×2.0 | 108 | 100 | 70 | 60 | 22 | 41 | 14 | - | 24 | 21 | 2.65 |

For other dimensions refer to T Type

## P Type - Fish Eye Joint

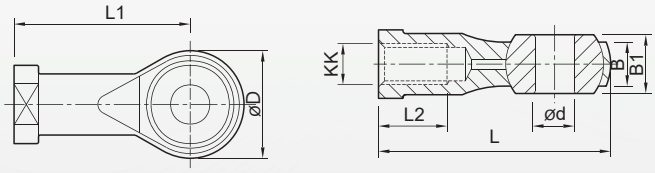


Unit : mm

| Label / Model | ød | KK | øD | B | B1 | L | L1 | L2 | Weight |
|---|---|---|---|---|---|---|---|---|---|
| PHS 10 | 10 | M10×1.25 | 26 | 11 | 14 | 56 | 43 | 21 | 0.08 |
| PHS 12 | 12 | M12×1.25 | 30 | 12 | 16 | 65 | 50 | 24 | 0.11 |
| PHS 16 | 16 | M16×1.5 | 38 | 15 | 21 | 83 | 64 | 33 | 0.21 |
| PHS 20 | 20 | M20×1.5 | 46 | 18 | 25 | 100 | 77 | 40 | 0.21 |
| PHS 28 | 28 | M27×2.0 | 6 | 25 | 36 | 134 | 103 | 53 | 0.37 |